STORM WATER MANAGEMENT ORDINANCE

CHAPTER XXXX

COMPREHENSIVE STORM WATER MANAGEMENT

XXXX.01 PURPOSE AND SCOPE

A. The purpose of this regulation is to establish technically feasible and economically reasonable storm water management standards to achieve a level of storm water quality and quantity control that will minimize damage to property and degradation of water resources and will promote and maintain the health, safety, and welfare of the citizens of the City of Barberton:

B. This regulation requires owners who develop or re-develop their property within the City of Barberton to:

1. Control storm water runoff from their property and ensure that all storm water management practices are properly designed, constructed, and maintained.

2. Reduce water quality impacts to receiving water resources that may be caused by new development or redevelopment activities.

3. Control the volume, rate, and quality of storm water runoff originating from their property so that surface water and ground water are protected and flooding and erosion potential are not increased.

4. Minimize the need to construct, repair, and replace subsurface storm drain systems.

5. Preserve natural infiltration and ground water recharge, and maintain subsurface flow that replenishes water resources, except in slippage prone soils and areas where contaminated groundwater has been recognized.

6. Incorporate storm water quality and quantity controls into site planning and design at the earliest possible stage in the development process.

7. Reduce the expense of remedial projects needed to address problems caused by inadequate storm water management.

8. Maximize use of storm water management practices that serve multiple purposes including, but not limited to, flood control, erosion control, fire protection, water quality protection, recreation, and habitat preservation.

9. Design sites to minimize the number of stream crossings and the width of associated disturbance in order to minimize the City of Barberton future expenses related to the maintenance and repair of stream crossings.

C. This regulation shall apply to all parcels used or being developed, either wholly or partially, for new or relocated projects involving highways and roads; subdivisions or larger common plans of development; industrial, commercial, institutional, or residential projects; building activities on farms; redevelopment activities; grading; and all other uses that are not specifically exempted in Section XXXX.01.

D. Public entities, including the State of Ohio, Summit County, and the City of Barberton shall comply with this regulation for roadway projects initiated after March 10, 2006 and, to the maximum extent practicable, for projects initiated before that time.

E. This regulation does not apply to activities regulated by, and in compliance with, the Ohio Agricultural Sediment Pollution Abatement Rules.

F. This regulation does not require a Comprehensive Storm Water Management Plan for linear construction projects, such as pipeline or utility line installation, that do not result in the installation of impervious surface as determined by the City of Barberton Engineer. Such projects must be designed to minimize the number of stream crossings and the width of disturbance. Linear construction projects must comply with the requirements of Erosion and Sediment Control Regulations (Ordinance 147-2003).

G. This regulation does not apply to new home construction that disturbs less than ¼ th of an acre as of the date of this ordinance.

H. This regulation does not apply to residential construction in subdivisions that previously provided stormwater control on a subdivision wide basis.

Table of Contents

XXXX.01PURPOSE AND SCOPE *1*
XXXX.02 DEFINITIONS *5*
XXXX.03DISCLAIMER OF LIABILITY *14*
XXXX.04CONFLICTS, SEVERABILITY, NUISANCES & RESPONSIBILITY *14*
XXXX.05DEVELOPMENT OF COMPREHENSIVE STORM WATER MANAGEMENT PLANS *14*
XXXX.06APPLICATION PROCEDURES *15*
XXXX.07COMPLIANCE WITH STATE AND FEDERAL REGULATIONS *16*
XXXX.08SITE PLAN REQUIREMENTS *17*
XXXX.09STORM WATER MANAGEMENT PLANS *19*
XXXX.10STORM CONTROL CRITERIA *21*
Storm Water Quality Control **22**
XXXX.11UNIFORM DESIGN STANDARDS *24*
Exhibit 1 - Primary and Secondary Drainage Detail **28**
Rainfall in the City of Barberton **30**
Exhibit 2 – Rainfall – IDF Curve **33**
Storm Runoff Calculation Methods **34**
Exhibit 3 – Runoff Coefficient – Rational Method **36**
Exhibit 4 – Time of Concentration Chart – Rational Method **37**
Exhibit 5 – Runoff Curve Number **38**
Exhibit 6 – Time of Concentration Chart – TR55 Method **39**
Graphical Peak Discharge Method **40**
Exhibit 7 - Summit County Soils – Hydrologic Groups **42**
Runoff Control Methods **43**
Exhibit 8 – Typical Hydrographs **44**
Storage Volume **51**
Storm Sewers **55**
Exhibit 9 - Nomograph for Solution of the Manning Formula **57**
Exhibit 10 - Type II Rainfall for Basin Routing **58**
Exhibit 11 – Tables of C Values for Weir and Orifices **59**
Exhibit 12 – Storage – Indication Computation Table **60**
Exhibit 13 – Storage – Indication Operations Table **61**
Exhibit 14 – Storm Sewer Design Chart **62**
Bibliography **63**
XXXX.12ON-GOING INSPECTIONS *64*
Detention Inspection Maintenance Agreement **64**
Residential Detention Basin Maintenance Agreement **66**

XXXX.13FEES *67*
XXXX.14BOND *67*
XXXX.15VIOLATIONS *67*
XXXX.16APPEALS *67*
XXXX.17PENALTY *68*
XXXX.18CONSTRUCTION DETAILS *69*
Detail No. 1a - Standard Manhole Detail **69**
Detail No. 2 – Standard Storm Sewer Manhole **70**
Detail No. 3 – Standard Frame Cover and Step for Manholes **71**
Detail No. 4 – Combination Manhole and Catch Basin **72**
Detail No. 4a – Combination Manhole and Catch Basin with T-Bar **73**
Detail No. 4b – Catch Basin No. 4b **74**
Detail No. 5 – Standard Storm Sewer Catch Basin **75**
Detail No. 5a – Standard Storm Sewer Catch Basin No. 3 with T-Bar **76**
Detail No. 5b – Catch Basin 5b **77**
Detail No. 6 – Catch Basin 2-2B **78**
Detail No. 6a – Type D Catch Basin **79**
Detail No. 7 Standard Castings No. 3 Inlets **80**
Detail No. 14 – Asphalt Permanent Pavement Restoration **81**
Detail No. 14a – Concrete Pavement Restoration **82**
Detail No. 29 – Typical – Sewer Pipe Encasement **83**
Detail No. 32 – Typical Y-Branch Installation or Sewer Reconstruction Repair Method **84**
Detail No. 32a – Typical Y-Branch Installation or Sewer Reconstruction Repair Method **85**
Detail No. 33 – Sewer Pipe Installation **86**
Detail No. 34 – Rigid Pipe Installation **87**
Detail No. 35 - Typical Dry Detention Basin **88**
Detail No. 36 – Catch Basin 4d **89**
Detail No. 37 – Catch Basin No. 5d **90**
Detail No. 38 – Standard Headwall **91**
Detail No. 39 – Standard Endwall **92**
Detail No. 40 – Channel Protection **93**
Detail No. 41 - Manhole Cover **94**
XXXX.19 RIPARIAN SETBACK REQUIREMENTS *95*
Exhibit 1 - Riparian Setback Map .....

XXXX.02 DEFINITIONS

The following definitions are provided to familiarize the user of this text with some of the common terms used in the text.

Accelerated Runoff means increased runoff due to less permeable surface area primarily caused by urbanization.

Acre A measurement of area equaling 43,560 square feet.

Area of Special Flood Hazard means the land in the flood plain subject to a one percent or greater chance of flooding in any given year. This area is commonly referred to as the 100-year flood plain or area of secondary storms.

As-Built Survey A survey shown on a plan or drawing prepared by a Registered Surveyor or Professional Engineer indicating the actual dimensions, elevations, and locations of any structures, underground utilities, swales, detention facilities, and sewage treatment facilities after construction has been completed.

Backwater means the increased depth of water upstream from a dam, culvert pipe or obstruction in a stream channel due to the existence of such obstruction.

Backwater Curve means the term applied to the longitudinal profile of the water surface in a stream or open channel when flow is steady but non-uniform.

Base Flood means the flood having a one-percent chance of being equaled or exceeded in any given year. On the average, the flood occurs once in 100 years although it may occur in any given year. The term "base flood" has the same meaning as the 100-year flood, secondary storms, regional flood, or intermediate regional flood and may be defined in terms of elevations and discharges at various locations along a stream.

Best Management Practices (BMPs): Schedule of activities, prohibitions of practices, operation and maintenance procedures, treatment requirements, and other practices to reduce the pollution of water resources and to control storm water volume and rate.

Bypass Channel means a man-made channel formed to carry excess stormwater runoff through a specific area.

Channel means a natural or artificial waterway which continuously or periodically contains moving water, or which forms a connecting link between two bodies of water. It has a definite bed and banks which confine the water.

Channelization means the straightening, dredging, or otherwise modifying of a stream and its overbank areas to permit the rapid passage of flood flows.

Channel Storage mean the control, retention, or detention of runoff.

Clean Water Act: Pub. L. 92-500, as amended Pub. L. 95-217, Pub. L. 95-576, Pub. L. 96-483, Pub. L. 97-117, and Pub. L. 100-4, 33 U.S.C. 1251 et. seq. Formally referred to as the Federal Water Pollution Control Act or the Federal Water Pollution Control Act Amendments of 1972.

Composite Hydrograph means a graph showing the sum of discharge values with respect to time from separate areas or sub-areas for a given point under consideration.

Conduit means an artificial or natural duct for conveying liquids.

Conveyance is a mathematical term applied to the measurement of the carrying capacities of channels and overbank areas. Conveyance is directly proportional to discharge.

Community: The City of Barberton, its designated representatives, boards, or commissions.

Course means a natural or artificial channel for passage of water.

Critical Depth means that particular depth of flow in a channel or conduit with a given discharge at which the specific energy is at a minimum.

Critical Storm means that storm intensity for which it and more frequent storms will need peak runoff rates reduced to compensate for the increase in runoff volume caused by development.

Culvert means a closed conduit for the passage of surface drainage water under a highway, railroad, embankment, or other impediment.

Dam means a barrier constructed across a watercourse for the purpose of

a) creating a reservoir, and

b) diverting water into a conduit or channel.

Detention means the temporary delaying of stormwater runoff.

Development Area means any contiguous (abutting) area owned by one person, corporation, or operated as one development unit and used or being developed for non-farm commercial, industrial, residential, or other non-farm purposes upon which earth-disturbing activities are planned or underway

Development Drainage Area: A combination of each hydraulically unique watershed with individual outlet points on the development area.

Discharge means the rate of flow or volume of water flowing in a stream or conduit at a given place within a given period of time.

Discharge Control Structure means a structure designed to control the rate of stormwater discharge. Also called "Flow Control Structure".

District means the Summit County Soil and Water Conservation District

Disturbed Area: An area of land subject to erosion due to the removal of vegetative cover and/or soil disturbing activities.

Ditch means an excavation either dug or natural for the purpose of drainage or irrigation with intermittent flow.

Division means the Division of Soil and Water Districts, Department of Natural Resources.

Drainage means in general, the removal of surface or groundwater from a given area either by gravity or by pumping. The term is applied herein to surface water.

Drainage Area means

a) The contributing area to a single drainage basin, expressed in acres, square miles, or other unit or area. Also called Catchment Area, Watershed, and River Basin.

b) The area served by a drainage system receiving storm and surface water or by a watercourse.

Drainage System means the surface and sub-surface system for the removal of water from the land. This includes both the natural elements of streams, gullies, ravines, marshes, swales, and ponds whether of an intermittent or continuous nature and man made elements which include conduits and appurtenant features, culverts, ditches, channels, storage facilities, streets, and the storm sewer system.

Drainageway means a route or course along which water moves or may move to drain an area.

Drop Inlet Structure means a vertical structure in a drainageway for the purpose of dropping water to a lower level.

Earth Disturbing Activity means any grading, excavating, filling, or other alteration of the earth's surface where natural or man-made ground cover is destroyed and which may result in or contribute to erosion and sediment pollution.

Earth Material means soil, sediment, rock, sand, gravel, and organic material or residue associated with or attached to the soil.

Easement means a grant by the property owner of the use of a strip of land by the public or by one or more persons or corporations for a specific purpose or purposes.

Engineer or City Engineer means the City of Barberton Engineering Department and its designated representatives.

Erosion for this purpose means the process by which the land surface is worn away by the action of wind, water, ice, gravity or any combination of those forces.

Excess Stormwater means that portion of stormwater runoff which exceeds the transportation capacity of natural drainage channels serving a specific watershed.

Extended Conveyance: A storm water management practice that replaces and/or enhances traditional open or closed storm drainage conduits by retarding flow, promoting percolation of runoff into the soil, and filtering pollutants during the storm water quality event.

Extended Detention: A storm water management practice that replaces and/or enhances traditional detention facilities by releasing the runoff collected during the storm water quality event over at least 24 to 48 hours, retarding flow and allowing pollutants to settle within the facility.

Final Stabilization: All soil disturbing activities at the site have been completed and a uniform perennial vegetative cover with a density of at least 80% coverage for the area has been established or equivalent stabilization practices, such as the use of mulches or geotextiles, have been employed.

Flood means a general and temporary condition of partial or complete inundation of normally dry land areas from:

1. The overflow of inland or tidal waters, and/or

2. The unusual and rapid accumulation or runoff of surface waters from any source.

Flood Elevation means the maximum water surface elevation of a particular flood event at a given location along a stream. The elevations are usually referenced to mean sea level.

Flood Frequency means the average frequency, statistically determined, for which it is expected that a specific flood state or discharge may be equaled or exceeded. The frequency of a particular flood state or discharge is usually expressed as having a probability of occurring on the average of once within a specified number of years. See also "Recurrence Interval".

Flood Hazard Area means the land in the flood plain subject to a one percent or greater chance of flooding in any given year. This area is commonly referred to as the 100-year flood plain or area of secondary storm.

Flood Peak means the highest value of stage or discharge attained during a flood event, i.e., peak stage or peak discharge.

Flood Plain means the areas adjoining a watercourse which may be inundated during a flood.

Flood Plain Management means a full range of public policy and action for ensuring wise use of the flood plains. It includes collection and dissemination of flood information, acquisition of flood plain lands through outright purchase or easements, construction of flood control structures, and enactment and administration of codes, ordinances, resolutions, and statutes regarding flood plain land use.

Flood Plain Regulations means all codes, ordinances, resolutions, and other regulations relating to land use and construction within the limits of the regulatory flood plain.

Flood Profile means a graph or longitudinal plot of maximum water surface elevations of a flood event versus measured distance along a stream from a fixed point. The zero or beginning point is usually the mouth of the stream and elevations are most commonly expressed as feet above mean sea level.

Flood Proofing means any combination of structural and nonstructural additions, changes, or adjustments primarily for the reduction or elimination of flood damages to real property, water and sanitary facilities, structures, and contents of buildings in flood hazard areas.

Flood Protection Elevation means that elevation at any point along a watercourse corresponding to an increase of not less than 2 feet above the water surface profile associated with the base flood.

Flood Stage means the height of the water surface above some arbitrary datum where overflow of the natural banks of a stream results in flood damage. As commonly used by the U.S. Weather Bureau and others, flood stages are referenced to a particular stream gage which is a representative index of a specific reach of a stream.

Floodway means the channel of a river or other watercourse and the adjacent land areas that must be preserved in order to discharge the base flood without cumulatively increasing the water surface elevation more than a designed height.

Floodway Encroachment Lines mean the physical lines marking the limits of the regulatory floodway on designated maps.

Floodway Fringe means that portion of the regulatory flood plain outside of the floodway.

Flow Routing means the derivation of an outflow hydrograph for a given stream reach from known values of upstream inflow.

Freeboard means the distance between the designed water surface elevation and the crest of the conveyance structure.

Frequency Curve means a graphical representation of the frequency of occurrence of specific events.

Gabion means a cage or wire basket filled with stones and deposited with others to protect against erosion.

Grade means

1. The slope of a channel, conduit, or natural ground surface, usually expressed in terms of the ratio or percentage of number of units of vertical rise or fall per unit of horizontal distance.
2. The elevation of the invert of the bottom of a pipeline, culvert, sewer, or similar conduit.
3. The finished surface of a road, top of embankment, or bottom of an excavation.

Grassed Waterway means a broad and shallow natural course of constructed channel covered with erosion resistant grasses or similar herbaceous cover and used to conduct surface water.

Head means the height of the free surface of water above a point of reference in the system.

Homogeneous Area means

1. A drainage area which has relative uniform runoff characteristics; i.e., land use, slope, soil treatment, etc. are relatively uniform.
2. Based on runoff curve numbers, a homogeneous area is one having curve numbers in the range of 65 to 80.

Hydraulics means a branch of science that deals with practical applications of the mechanics of water movement.

Hydraulic Grade Line means a hydraulic profile of the piezometric level of water at all points along a line.

Hydrograph means a graph showing the discharge stage, velocity, or other property of water with respect to time for a given point under consideration.

Hydrology means the applied science concerned with the water of the earth in all its states. It deals with the processes of governing the depletion and replenishment of the water resources of the land areas of the earth.

Impervious Cover: Any surface that cannot effectively absorb or infiltrate water. This may include roads, streets, parking lots, rooftops, sidewalks, and other areas not covered by vegetation.

Improvements means the entire right-of-way grading and street surfacing, with or without curbs and gutters, sidewalks, crosswalks, water mains, sanitary and storm sewers, culverts, bridges, street trees, street lighting and other appropriate items.

Infiltration means

1. The entering of water through the pores of a soil or other porous medium.
2. The absorption of liquid by the soil, either as it falls as precipitation or from a stream flowing over the surface.

Initial Abstractions means all losses before runoff begins.

Inlet means

1. A surface connection to a drain pipe.
2. An opening into a storm sewer system for the entrance of surface or stormwater.
3. A structure at the diversion end of a conduit.

Inlet Control means control of the relationship between headwater elevation and discharge by the inlet or upstream end of any structure through which water may flow.

Lag means the increment of time from the center of mass of that portion of rainfall that runs off to the peak rate of runoff from the watershed. The lag of a watershed may be thought of as a weighted time of concentration.

Larger Common Plan of Development: A contiguous area where multiple separate and distinct construction activities may be taking place at different times on different schedules under one plan.

Mean Velocity means that average velocity of water flowing in a channel or conduit at a given cross section or in a given reach. Also called average velocity. It is equal to the discharge divided by the cross-sectional area of the channel or conduit.

Non-Homogeneous Area means

1. A drainage area in which the runoff characteristics are dissimilar;
2. Based on runoff curve numbers, a non-homogeneous area is one having curve numbers outside the range of 65 to 80.

NPDES: National Pollutant Discharge Elimination System. A regulatory program in the Federal Clean Water Act that prohibits the discharge of pollutants into surface waters of the United States without a permit.

Nonstructural Storm Water Management Practice: Storm water runoff control and treatment techniques that use natural practices to control runoff and/or reduce pollution levels.

Orifice means an opening with closed perimeter and of regular form in a plate, wall or partition through which water may flow.

Open-Channel Flow means flow in any open or closed conduit where the water surface is free; that is, where the water surface is at atmospheric pressure.

Outfall means the location where storm runoff discharges from a sewer or conduit. Also applied to the outfall sewer or channel which carries the storm runoff to the point of outfall.

Outlet Control means control of the relationship between the headwater elevation and the discharge by the outlet or downstream end of any structure through which water may flow.

Overflow means the excess water that overflows the ordinary limits such as the stream banks, the spillway crest, or the ordinary level of a container.

Peak Rate of Runoff means the maximum rate of runoff for any storm.

Person means any individual, corporation, partnership, joint venture, agency, unincorporated association, municipal corporation, county or state agency, the Federal government, or any combination thereof.

Plat means a map of a tract or parcel of land.

Plan or Sediment control plan means a written description, acceptable to the approving agent, of methods for controlling sediment pollution from accelerated erosion on a development area and/or from erosion caused by accelerated runoff from a development area.

Precipitation means the total measurable supply of water received directly from clouds as rainfall, snow, hail, or sleet; usually expressed as depth in a day, month, or year.

Primary Drainage System means that part of the storm drainage system which is used regularly for collecting, transporting, and disposing of storm runoff, snow melt, and miscellaneous minor flows. The capacity of the primary drainage system should be equal to the maximum rate of runoff to be expected from a design storm which may have a frequency of occurrence of once in ten years. The primary system is also termed the minor system, or the storm sewer system and may include many features ranging from curbs and gutters to storm sewer pipes and open drainageways.

Post Development means the state of condition of the earth's surface after urbanization occurs. Other terms are developed, future and after development.

Pre-Construction Meeting: Meeting prior to construction between all parties associated with the construction of the project including government agencies, contractors and owners to review agency requirements and plans as approved and submitted.

Pre-Development means the state of condition of the earth's surface prior to development.

Professional Engineer: A Professional Engineer registered in the State of Ohio with specific education and experience in water resources engineering, acting in conformance with the Code of Ethics of the Ohio State Board of Registration for Engineers and Surveyors.

Public Utilities means all persons, firms, corporations, co-partnerships or municipal authority providing gas, electricity, water, steam, telephone, sewer or other services of a similar nature.

Public Waters means that water within rivers, streams, ditches, and lakes, except private ponds and lakes wholly within single properties, or waters leaving property on which the surface water originates.

Rainfall Duration means the length of time of the rainfall event from beginning to end, usually in hours.

Rainfall Event means a fall of rain or precipitation in the form of water which occurs in a particular period of time.

Rainfall Intensity means amount of rainfall occurring in a unit of time, converted to its equivalent in inches per hours at the same rate.

Reach means a longitudinal segment of a stream or river within which flood heights are primarily controlled by man-made or natural obstructions or constrictions.

Recurrence Interval means the average interval of time within which a given event will be equaled or exceeded once.

Redevelopment: A change to previously existing, improved real estate, including but not limited to the demolition or building of structures, fillings, grading, paving, or excavating.

Regulatory Area means that portion of the flood plain subject to inundation by the 100 year flood that has been designated as a portion of the major drainage system.

Regulatory Flood Plain means a watercourse and the area adjoining a watercourse which have been or hereafter may be covered by the base flood. The regulatory flood plain includes both the floodway and floodway fringe.

Regulatory Floodway means the channel of a river or other watercourse and the adjacent land areas that must be preserved in order to discharge the base flood without cumulatively increasing the water surface elevation more than a designed height.

Return Period see "recurrence interval".

Riparian Area: Naturally vegetated land adjacent to any brook, creek, river, or stream having a defined bed and bank that, if appropriately sized, helps to stabilize streambanks, limit erosion, reduce flood size flows, and/or filter and settle out runoff pollutants, or performs other functions consistent with the purposes of this regulation.

Riparian Setback means the real property adjacent to a designated watercourse and/or wetlands located within the area defined by the criteria set forth in these regulations.

Runoff means the portion of rainfall, melted snow, or irrigation water that flows across the ground surface and eventually is returned to streams.

Runoff, Total Direct means the total volume of flow from a drainage area for a definite period of time such as a day, month, or rainfall event which reached stream channels.

Runoff Volume means the total quantity or volume of runoff during a specified time period. It may be expressed in cubic feet per second, acre-feet, in inches depth of the drainage area, or in other units of volume.

Secondary Drainage System means that storm drainage system which carries the runoff from a storm having a frequency of occurrence of once in 100 years. The secondary system will function whether or not it has been planned and designed, and whether or not improvements are situated wisely in respect to it. The secondary system usually includes many features such as streets, ravines, and major drainage channels. Storm sewer systems may reduce the flow in many parts of this major system by storage and transporting water underground.

Sediment means solid material both mineral and organic, that is in suspension, is being transported, or has been moved from its site or origin by wind, water, gravity, or ice and has come to rest on the earth's surface above or below sea level.

Sediment Basin means a barrier, dam, or other suitable detention facility built across an area of flow to settle and retain sediment carried by the runoff waters.

Sediment Pollution means failure to use management or conservation practices to abate wind or water erosion of the soil or to abate the degradation of the waters or the state of soil sediment in conjunction with land grading, excavating, filling, or other soil disturbing activities on land used or being developed for non-farm, commercial, industrial, residential, or other non-farm purposes.

Site Owner/Operator: Any individual, corporation, firm, trust, commission, board, public or private partnership, joint venture, agency, unincorporated association, municipal corporation, county or state agency, the federal government, other legal entity, or an agent thereof that is responsible for the overall construction site.

Slope means the inclination or grade of a channel, conduit, or natural ground surface, usually expressed in terms of the percentage of units of vertical rise or fall per unit of horizontal distance.

Slope Protection means soil cover on a slope surface to minimize or eliminate erosion and/or to ensure stability of a soil slope steeper than the normal angle of repose of the soil. Examples are: low maintenance ground cover such as crown vetch and spreading juniper, dumped rock or rip-rap, stone filled gabions, bituminous or concrete paving, and concrete or timber cribbing.

Sloughing means a slip or downward movement of an extended layer of soil frequently resulting from the undermining action of water, waves, or the earth disturbing activity of man.

Soil Loss means soil moved from a given site by the forces of erosion and the redeposit of the soil at another site on land or in a body of water.

Soil Disturbing Activity: Clearing, grading, excavating, filling, or other alteration of the earth's surface where natural or human made ground cover is destroyed and that may result in, or contribute to, increased storm water quantity and/or decreased storm water quality.

Spillway means a waterway in or about a hydraulic structure for the escape of excess Stormwater.

Stabilization: The use of Best Management Practices that reduce or prevent soil erosion by storm water runoff, trench dewatering, wind, ice, gravity, or a combination thereof.

Storage means the control, retention, or detention of runoff.

- Channel Storage means storm runoff water present in a channel at any given time. Generally considered in the attenuation of the peak of a flood hydrograph moving downstream.
- Depression Storage means that portion of the rainfall that is collected and held in small depressions and does not become part of the general runoff.
- Detention Storage means storm runoff collected and stored for a short period of time and then released at a controlled rate (dry pond).
- Downstream Storage means the storage of storm runoff water at some distance from the points of rainfall occurrence but before it reaches areas where it may endanger lives or property.
- Off-stream Storage means the temporary storage of storm runoff water away from the main channel of flow
- On-stream Storage means the temporary storage of storm runoff water behind embankments or dams located on the channel.
- Retention Storage means storm runoff collected and stored for a short period of time and which is released at a controlled rate leaving in the facility a minimum pool of water. This facility is often associated with water related recreational or aesthetic uses (wet pond).
- Upstream On-site Storage means the storage of storm runoff water near the points of rainfall occurrence, usually applicable to rooftop ponding, parking lot ponding, and small drainage basins.

Storm frequency means the average period of time which a storm of a give duration and intensity can be expected to be equaled or exceeded.

Storm, Primary Design means that storm used for design purposes, the runoff from which is used for sizing the primary storm drainage system. It usually is of such magnitude that it can be expected to occur only once every ten years.

Storm, Secondary Design means that storm used for design purposes, the runoff from which is used for sizing the secondary drainage works. It usually is a storm of such magnitude that it can be expected to occur once every 100 years.

Storm Drainage System means the surface and sub-surface system for the removal of water from the land, including both the natural elements of streams, gullies, ravines, marshes, swales, and ponds whether of an intermittent or continuous nature and man-man elements which include conduits and appurtenant features, culverts, ditches, channels, storage facilities, streets, and the storm sewer system.

Stream means a body of water running or flowing on the earth's surface or channel in which such flow occurs. Flow may be seasonally intermittent.

Street Classifications:

- Collector Street means a street which is intended to carry traffic from minor streets to the major streets.
- Major Street means a street used primarily for fast or heavy traffic between large or intensively developed districts.

- Minor Street means a street intended primarily to provide pedestrian and vehicular access to the abutting properties.

Street Flow means the total flow of stormwater runoff in a street, usually the sum of gutter flow on each side of the street. Also, the total flow where there are no curbs and gutters.

Structural Storm Water Management Practice: Any constructed facility, structure, or device that provides storage, conveyance, and/or treatment of storm water runoff.

Structure means a walled and roofed building, including a gas or liquid storage tank that is principally above ground. Mobile homes are also considered structures.

Subdivision Regulations mean regulations and standards established by the City Council of Barberton, Ohio and known by us as the "City of Barberton Development Code".

Substantial Improvement means any repair, reconstruction, or improvement of a structure, the cost of which equals or exceeds 50 percent of the market value of a structure either,

A. before the improvement or repair is started, or

B. if the structure has been damaged and is being restored, before the damage occurred.

Surface Flow or Sheet Flow means the surface flow from rainfall on ground surfaces, pavements, or other exposed surfaces until such flow reaches a gutter, ditch, swale, inlet, or other point of concentration.

Swale means a drainage channel, normally grass lined, with relatively flat side sloped (5:1 or less).

Technical Release 55 means the Soil Conservation Service (SCS) organized procedure for the analysis of stormwater.

Time of Concentration means the time required for stormwater runoff to travel from the most hydrologically remote section of the drainage area to the point under consideration.

Time of Flow means the time required for water to flow in a storm sewer or channel from the point where it enters to a particular point.

Time of Inlet means the time of concentration for the inlet, usually includes ground surface flow time and gutter flow time.

Topsoil means surface and upper surface soils which presumably are darker colored, fertile soil materials, ordinarily rich in organic matter or humus debris.

Unit Hydrograph means a graph of runoff vs. time produced by a unit rainfall over a given duration.

Velocity of Approach means the mean velocity immediately upstream from a weir, dam, or other hydraulic structure.

Watercourse means a channel in which a flow of water occurs either continuously or intermittently in a definite direction. The term applies to either natural or artificially constructed channels.

Water Level:

- Design High Water Level means calculated water level in storage facilities associated with the primary design storm and volume requirements criteria. Also, predicted water level in ditches and swales under primary design storm.
- Maximum Water Level means the predicted water level in storage facilities or drainage system in overflow condition used in conjunction with flood flow routing of the secondary design storm.

Water Quality Volume: The volume of runoff from a contributing watershed that must be captured and treated, equivalent to the maximized capture volume as defined by the Ohio Water Quality Standards in OAC Chapter 3745-1.

Water Resource: Any public or private body of water; including wetlands; the area within the ordinary high water level of lakes and ponds; as well as the area within the ordinary high water level of any brook, creek, river, or stream having a defined bed and bank (either natural or artificial) which confines and conducts continuous or intermittent flow.

Watershed: The total drainage area contributing storm water runoff to a single point.

Wetland: Those areas that are inundated or saturated by surface or ground water at a frequency and duration sufficient to support, and that under normal circumstances do support, a prevalence of vegetation typically adapted for life in saturated soil conditions, including swamps, marshes, bogs, and similar areas (40 CFR 232, as amended).

XXXX.03 DISCLAIMER OF LIABILITY

Compliance with the provisions of this regulation shall not relieve any person from responsibility for damage to any person otherwise imposed by law. The provisions of this regulation are promulgated to promote the health, safety, and welfare of the public and are not designed for the benefit of any individual or any particular parcel of property.

XXXX.04 CONFLICTS, SEVERABILITY, NUISANCES & RESPONSIBILITY

A. Where this regulation is in conflict with other provisions of law or ordinance, the most restrictive provisions, as determined by the City of Barberton Engineer, shall prevail.

B. If any clause, section, or provision of this regulation is declared invalid or unconstitutional by a court of competent jurisdiction, the validity of the remainder shall not be affected thereby.

C. This regulation shall not be construed as authorizing any person to maintain a nuisance on their property, and compliance with the provisions of this regulation shall not be a defense in any action to abate such a nuisance.

D. Failure of the City of Barberton to observe or recognize hazardous or unsightly conditions or to recommend corrective measures shall not relieve the site owner from the responsibility for the condition or damage resulting therefrom, and shall not result in the City of Barberton, its officers, employees, or agents being responsible for any condition or damage resulting therefrom.

XXXX.05 DEVELOPMENT OF COMPREHENSIVE STORM WATER MANAGEMENT PLANS

A. This regulation requires that a Comprehensive Storm Water Management Plan be developed and implemented for soil disturbing activities disturbing one (1) or more acres of total land, or less than one (1) acre if part of a larger common plan of development or sale disturbing one (1) or more acres of total land, and on which any regulated activity of Section XXXX.01 (C) is proposed.

B. The City of Barberton shall administer this regulation, shall be responsible for determination of compliance with this regulation, and shall issue such notices and orders as may be necessary. The City of Barberton may consult with the Summit SWCD, private engineers, storm water districts, or other technical experts as necessary in reviewing the Comprehensive Storm Water Management Plan.

XXXX.06 APPLICATION PROCEDURES

A. Pre-Application Meeting: The applicant shall attend a Pre-Application Meeting with the City of Barberton Engineer to discuss the proposed project, review the requirements of this regulation, identify unique aspects of the project that must be addressed during the review process, and establish a preliminary review and approval schedule.

B. Preliminary Comprehensive Storm Water Management Plan: The applicant shall submit two (2) sets of a Preliminary Comprehensive Storm Water Management Plan (Preliminary Plan) and the applicable fees to the City of Barberton Engineer and/or the Storm Water Administrator.

   The Preliminary Plan shall show the proposed property boundaries, setbacks, dedicated open space, public roads, water resources, storm water control facilities, and easements in sufficient detail and engineering analysis to allow the City of Barberton Engineer to determine if the site is laid out in a manner that meets the intent of this regulation and if the proposed storm water management practices are capable of controlling runoff from the site in compliance with this regulation. The applicant shall submit two (2) sets of the Preliminary Plan and applicable fees as follows:

   1) For subdivisions: in conjunction with the submission of the preliminary subdivision plan.

   2) For other construction projects: In conjunction with the application for a zoning permit.

   3) For general clearing projects: In conjunction with the application for a zoning permit.

C. Final Comprehensive Storm Water Management Plan: The applicant shall submit two (2) sets of a Final Comprehensive Storm Water Management Plan (Final Plan) to the City of Barberton Engineer and/or the [storm water administrator] in conjunction with the submittal of the final plat, improvement plans, or application for a building or zoning permit for the site. The Final Plan shall meet the requirements of Section XXXX.09 and shall be approved by the City of Barberton Engineer prior to approval of the final plat and/or before issuance of a zoning permit by the Zoning Inspector or building permit by the Building Inspector.

D. Review and Comment: The City of Barberton Engineer and/or the storm water administrator shall review the Preliminary and Final Plans submitted, and shall approve or return for revisions with comments and recommendations for revisions. A Preliminary or Final Plan rejected because of deficiencies shall receive a narrative report stating specific problems and the procedures for filing a revised Preliminary or Final Plan.

E. Approval Necessary: Land clearing and soil-disturbing activities shall not begin and building permits shall not be issued without an approved Comprehensive Storm Water Management Plan.

F. Sublots Will Not Proceed: Comprehensive Storm Water Management Plans for individual sublots in a subdivision will not be approved and building permits will not be issued unless the larger common plan of development or sale containing the sublot is in compliance with this regulation.

G. Valid for Two Years: Approvals issued in accordance with this regulation shall remain valid for two (2) years from the date of approval.

XXXX.07COMPLIANCE WITH STATE AND FEDERAL REGULATIONS

Approvals issued in accordance with this regulation do not relieve the applicant of responsibility for obtaining all other necessary permits and/or approvals from other federal, state, and/or county agencies. If requirements vary, the most restrictive shall prevail. These permits may include, but are not limited to, those listed below. Applicants are required to show proof of compliance with these regulations before the City of Barberton will issue a building permit.

A. Ohio EPA NPDES Permits authorizing storm water discharges associated with construction activity or the most current version thereof: Proof of compliance with these requirements shall be the applicant's Notice of Intent (NOI) number from Ohio EPA, a copy of the Ohio EPA Director's Authorization Letter for the NPDES Permit, or a letter from the site owner certifying and explaining why the NPDES Permit is not applicable.

B. Section 401 of the Clean Water Act: Proof of compliance shall be a copy of the Ohio EPA Water Quality Certification application tracking number, public notice, project approval, or a letter from the site owner certifying that a qualified professional has surveyed the site and determined that Section 401 of the Clean Water Act is not applicable. Wetlands, and other waters of the United States, shall be delineated by protocols accepted by the U.S. Army Corps of Engineers at the time of application of this regulation.

C. Ohio EPA Isolated Wetland Permit: Proof of compliance shall be a copy of Ohio EPA's Isolated Wetland Permit application tracking number, public notice, project approval, or a letter from the site owner certifying that a qualified professional has surveyed the site and determined that Ohio EPA's Isolated Wetlands Permit is not applicable. Isolated wetlands shall be delineated by protocols accepted by the U.S. Army Corps of Engineers at the time of application of this regulation.

D. Section 404 of the Clean Water Act: Proof of compliance shall be a copy of the U.S. Army Corps of Engineers Individual Permit application, public notice, or project approval, if an Individual Permit is required for the development project. If an Individual Permit is not required, the site owner shall submit proof of compliance with the U.S. Army Corps of Engineer's Nationwide Permit Program. This shall include one of the following:

1. A letter from the site owner certifying that a qualified professional has surveyed the site and determined that Section 404 of the Clean Water Act is not applicable.

2. A site plan showing that any proposed fill of waters of the United States conforms to the general and special conditions specified in the applicable Nationwide Permit. Wetlands, and other waters of the United States, shall be delineated by protocols accepted by the U.S. Army Corps of Engineers at the time of application of this regulation.

E. Ohio Dam Safety Law: Proof of compliance shall be a copy of the ODNR Division of Water permit application tracking number, a copy of the project approval letter from the ODNR Division of Water, or a letter from the site owner certifying and explaining why the Ohio Dam Safety Law is not applicable.

XXXX.08 SITE PLAN REQUIREMENTS

General Information Required

A. The plan shall be drawn to a scale of 1:20, show topographic features of the lot, building placement, and activity area, and shall include a circulation and parking plan, planting and landscape plan, with engineering and construction information.

B. A location map shall be provided with the following:

1. Title, name, and address of owner.

2. The Professional Engineer who prepared the Storm Water Management Plan

C. The following existing and proposed data shall be provided:

1. Boundary lines and distances

2. Total area of the site and the area of the site that is expected to be disturbed (i.e., grubbing, clearing, excavation, filling or grading, including off-site borrow areas).

3. An estimate of the impervious area and percent of imperviousness created by the soil-disturbing activity at the beginning and at the conclusion of the project.

4. If available, the quality of any known pollutant discharge from the site such as that which may result from previous contamination caused by prior land uses.

5. Easements - Location, width, and purpose.

6. Streets on and adjacent to the tract.

   a. Name and right-of-way width and location.

   b. Type, width, and elevation of surfacing.

   c. Established centerline elevations.

   d. Walks, curbs, gutters, etc.

7. Driveways and parking lots on and adjacent to the tract.

   a. Type, width, elevation, and location.

   b. Visual relief and traffic channelization shall be provided through the use of trees, planted and landscaped dividers, island and walkways.

   c. Where applicable, screening of parking areas and service areas from surrounding properties shall be provided.

   d. On-site traffic circulation shall be designed for fire and police protection.

   e. The design and construction standards of all private roads, driveways, and parking areas shall conform to the standards and regulations established by the City Engineer.

8. In the case of commercial or industrial uses, adequate provision shall be made for the disposal of all wastes as directed by the Director of Public Service.

9. The architectural design of buildings shall be developed with consideration given to the relationship of adjacent developments.

10. Utilities

    a. Size location, and invert elevation of sanitary and storm sewers.

    b. Location and size of water mains.

    c. Location and size of gas lines.

    d. Location of fire hydrants.

    e. Electric and telephone poles.

    f. Street and parking lot lights.

11. Ground elevations - Two foot contours and spot elevations are required.

12. Subsurface conditions - Conditions that are not typical, such as abandoned

    mines, gas wells, etc.

13. Other conditions on the adjacent land

    A) Approximate direction and gradient of ground slope, including any embankments or retaining walls.

    B) Character and location of buildings, railroads, power lines, and towers and other nearby non-residential land uses or adverse influences

14. Proposed public improvements - Highways or other major improvements planned by public authorities for future construction on or near the tract.

15. North arrow and scale

16. Detention/retention basin shall include the following:

    a. One foot contours and spot elevations are required.

    b. All piping sizes, grades, inverts, locations, etc.

    c. All catch basin types, sizes, details, orifices, grates, etc.

    d. Critical Storm, volume required, high water elevation.

    e. Type of ground cover.

17. Approved recorded agreement covering the maintenance and inspection of the detention/retention facility.

18. Approved letter or approved sediment control construction details and procedure as specified by the City.

19. A property survey with iron pins set may be required and a plat provided to establish and allow the checking of the location of said facilities.

20. As-Built drawings and a CD prepared by a professional engineer or surveyor shall be submitted on mylar prior to final acceptance. The As-Built survey shall also verify the storage volume of detention/retention structures.

21. Ohio EPA NPDES Permit Number and other applicable state and federal permit numbers, if available, or status of various permitting requirement if final approvals have not been received.

XXXX.09 STORM WATER MANAGEMENT PLANS

1. Comprehensive Storm Water Management Plan Required: The applicant shall develop a Comprehensive Storm Water Management Plan describing how the quantity and quality of storm water will be managed after construction is complete for every discharge from the site and/or into a water resource. The Plan will illustrate the type, location, and dimensions of every structural and non-structural storm water management practice incorporated into the site design, and the rationale for their selection. The rationale must address how these storm water management practices will address flooding within the site as well as flooding that may be caused by the development upstream and downstream of the site. The rationale will also describe how the storm water management practices minimize impacts to the physical, chemical, and biological characteristics of on-site and downstream water resources.

2. Preparation by Professional Engineer: The Comprehensive Storm Water Management Plan shall be prepared by a registered professional engineer and include supporting calculations, plan sheets, and design details. To the extent necessary, as determined by the City of Barberton, a site survey shall be performed by a Registered Professional Surveyor to establish boundary lines, measurements, or land surfaces.

3. Community Procedures: The City of Barberton Engineer shall prepare and maintain procedures providing specific criteria and guidance to be followed when designing the storm water management system for the site. These procedures may be updated from time to time, at the discretion of the City of Barberton Engineer based on improvements in engineering, science, monitoring, and local maintenance experience. The City of Barberton Engineer shall make the final determination of whether the practices proposed in the Comprehensive Storm Water Management Plan meet the requirements of this regulation. The City of Barberton Engineer may also maintain a list of acceptable Best Management Practices that meet the criteria of this ordinance to be used in the City of Barberton.

4. Contents of Comprehensive Storm Water Management Plan: The Comprehensive Storm Water Management Plan shall contain an application, narrative report, construction site plan sheets, a long-term Inspection and Maintenance Agreement, and a site description with the following information provided:

5. Site description:

   a) A description of the nature and type of the construction activity (e.g. residential, shopping mall, highway, etc.).

   b) Total area of the site and the area of the site that is expected to be disturbed (i.e. grubbing, clearing, excavation, filling or grading, including off-site borrow areas).

c) A description of prior land uses at the site.

d) An estimate of the impervious area and percent of imperviousness created by the soil-disturbing activity at the beginning and at the conclusion of the project.

e) Existing data describing the soils throughout the site, including the soil series and association, hydrologic soil group, porosity, infiltration characteristics, depth to groundwater, depth to bedrock, and any impermeable layers.

f) If available, the quality of any known pollutant discharge from the site such as that which may result from previous contamination caused by prior land uses.

g) The location and name of the immediate water resource(s) and the first subsequent water resource(s).

h) The aerial (plan view) extent and description of water resources at or near the site that will be disturbed or will receive discharges from the project.

6. Site map showing:

   a) Limits of soil-disturbing activity on the site.

   b) Soils types for the entire site, including locations of unstable or highly erodible soils.

   c) Existing and proposed one-foot (1') contours. This must include a delineation of drainage watersheds expected before, during, and after major grading activities as well as the size of each drainage watershed in acres.

   d) Water resource locations including springs, wetlands, streams, lakes, water wells, and associated setbacks on or within 200 feet of the site, including the boundaries of wetlands or streams and first subsequent named receiving water(s) the applicant intends to fill or relocate for which the applicant is seeking approval from the Army Corps of Engineers and/or Ohio EPA.

   e) Existing and planned locations of buildings, roads, parking facilities, and utilities.

   f) The location of any in-stream activities including stream crossings.

7. Contact information: Company name and contact information as well as contact name, addresses, and phone numbers for the following:

   a) The Professional Engineer who prepared the Comprehensive Storm Water Management Plan.

   b) The site owner.

8. Phase, if applicable, of the overall development plan.

9. List of sublot numbers if project is a subdivision.

10. Ohio EPA NPDES Permit Number and other applicable state and federal permit numbers, if available, or status of various permitting requirements if final approvals have not been received.

11. Location, including complete site address and sublot number if applicable.

12. Location of any easements or other restrictions placed on the use of the property.

XXXX.10 STORM CONTROL CRITERIA

Storm runoff control addresses both peak rate and total volume of runoff.

The peak rate of runoff from an area after development shall not exceed the peak rate of runoff from the same area before development for all storms up to a 100-year frequency, 24 hour storm. In addition, if it is found a proposed development will increase the volume of runoff from an area, the peak rate of runoff from certain more frequent storms must be controlled further.

There are two reasons why increases in volume of runoff require a control standard more restrictive than controlling just the pre-development conditions. First, increases in volume means runoff will be flowing for a longer period of time. When routed through a watershed, these longer flows may join at some point downstream; thereby creating peak flows and the problems associated with peak flows (flooding). This is known as the "Routing Problem." Second, longer flow periods of large runoff quantities place a highly erosive stress on natural channels. This stress can be minimized by reducing the rate of discharge.

Critical Storm

The increase in the rate of runoff is dependent on the type and amount of development that occurs on a site. The change from pervious to impervious land uses causes an increase in runoff. In keeping with the storm control criteria, the developed runoff must be controlled and/or detained to reflect pre-developed conditions.

1. To determine the allowable peak rate of runoff that can be discharged from the development, a critical storm frequency shall be determined as follows:

   a. Determine the volume of runoff from a 1-year frequency, 24-hour storm occurring over the area before and after development.

   b. Determine the percent of increase volume due to development and using this percentage, pick the critical storm from the following table:

If the percentage of increase in volume of runoff is		The critical storm for discharge limitation will be
Equal to or greater than	and less than	
0	10	1 Year
10	20	2 Years
20	50	5 Years

50	100	10 Years
100	250	25 Years
250	500	50 Years
500		100 Years

2. The peak rate of discharge from any storm having a frequency greater than or equal to the critical storm, occurring over the development, shall not exceed the peak rate of runoff from a 1-year frequency storm, occurring over the same area, under pre-development conditions. Storms of less frequent occurrence (longer return period) than the critical storm, shall control the peak rate of discharge from the development to be no greater than the peak rate of runoff for the same frequency storm under pre-development conditions.

   As an example, if the total volume is shown to be increased by 35%, the critical storm is a 5 year storm. The peak rate of runoff (allowable discharge) for all storms up to the intensity of the critical storm shall be controlled so as not to exceed the peak rate of runoff from the 1-year frequency storm under pre-development conditions. The peak rate of runoff (allowable discharge) from a more intense storm need only be controlled so as <u>not to exceed the pre-development peak rate of runoff</u> from the same frequency of storm.

3. The storm control structure shall be designed to only release the allowable discharge for each given storm frequency through the 100 year storm occurrence. The system will require a storage area where storm can be detained until it is released through the control structure. The difference between the actual peak rate of runoff from the developed site and the allowable peak rate of discharge will determine the required storage volume.

   Storage volume does not have to be provided for off-site upstream areas. Runoff from off-site areas will be routed through the drainage system in the proposed development at the same frequency that was used for the on-site system.

Storm Water Quality Control

<u>Large Construction Activities</u>. For all large construction activities (involving the disturbance of five or more acres of land or will disturb less than five acres, but is a part of a larger common plan of development or sale which will disturb five or acres of land), the post construction BMP(s) chosen must be able to detain storm water runoff for protection of the stream channels, stream erosion control, and improved water quality. Structural (designed) post-construction storm water treatment practices shall be incorporated into the permanent drainage system for the site. The BMP(s) chosen must be sized to treat the water quality volume (WQ_v) AND ENSURE COMPLIANCE WITH Ohio's Water Quality Standards in OAC Chapter 3745-1. The WQ_v shall be equivalent to the volume of runoff from a 0.75 –inch rainfall and shall be determined according to one of the two following methods:

i. Through a site hydrologic study approved by the local municipal permitting authority that uses continuous hydrologic simulation and local long-term hourly precipitation records or

ii. Using the following equation:

$$WQ_v = C * P * A / 12$$

where:

WQ_v = water quality volume in acre-feet

C= runoff coefficient appropriate for storms less than 1 inch (see Table 1)

P= 0.75 inch precipitation depth

A= area draining into the BMP in acres

Table 1 Runoff Coefficients Based on the Type of Land Use

Land Use	Runoff Coefficient
Industrial & Commercial	0.8
High Density Residential (>8 dwellings/acre)	0.5
Medium Density Residential (4 to 8 dwellings/acre)	0.4
Low Density Residential (<4 dwellings/acre)	0.3
Open Space and Recreational Areas	0.2

Where the land use will be mixed, the runoff coefficient should be calculated using a weighted average. For example, if 60% of the contributing drainage area to the storm water treatment structure is Low Density Residential, 30% is High Density Residential, and 10% is Open Space, the runoff coefficient is calculated as follows (0.6)(0.3) + (0.3)(0.5) + (0.1)(0.2) = 0.35.

An additional volume equal to 20 percent of the WQv shall be incorporated into the BMP for sediment storage and/or reduced infiltration capacity. Ohio EPA recommends that BMPs be designed according to the methodology included in the Rainwater and Land Development manual or in another design manual acceptable for use by Ohio EPA.

BMPs shall be designed such that the drain time is long enough to provide treatment, but short enough to provide storage available for successive rainfall events as described in Table 2 below.

Table 2 Target Draw Down (Drain) Times for Structural

Post-Construction Treatment Control Practices

Best Management Practice	Drain Time of WQ_v
Infiltration	24 – 48 hours
Vegetated Swale and Filter Strip	24 hours
Extended Detention Basin (Dry Basins)	48 hours
Retention Basins (Wet Basins)*	24 hours
Constructed Wetlands (above permanent pool)	24 hours
Media Filtration, Bioretention	40 hours

* Provide both a permanent pool and an extended detention volume above the permanent pool, each sized at 0.75 * WQv

The permittee may request approval from Ohio EPA to use alternative structural post-construction BMPs if the permittee can demonstrate that the alternative BMPs are equivalent in effectiveness to those listed in Table 2 above. Construction activities shall be exempt from this condition if it can be demonstrated that the WQ_v is provided within an existing structural post-construction BMP that is part of a larger common plan of development or if structural post-construction BMPs are addressed in a regional or local storm water management plan. Public entities (i.e., the state, counties, townships, cities, or villages) shall comply with the post-construction storm water management requirements of Part III.G.2.e for roadway construction projects initiated after March 10, 2006 and where practicable for projects initiated as of the effective date of this permit and thereafter.

For redevelopment projects (i.e., developments on previously developed property), post-construction practices shall either ensure a 20 percent net reduction of the site impervious area, provide for treatment of at least 20 percent of the $WQ_{v,}$ or a combination of the two.

Small Construction Activities. For all small land disturbance activities (which disturb one or more, but less than five acres of land and is not a part of a larger common plan of development or sale which will disturb five or more acres of land), a description of measures that will be installed during the construction process to control pollutants in storm water discharges that will occur after construction operations have been completed must be included in the SWP3. Structural measures should be placed on upland soils to the degree attainable.

i. Such practices may include, but are not limited to: storm water detention structures (Including wet basins); storm water retention structures; flow attenuation by use of open vegetated swales and natural depressions; infiltration of runoff onsite; and sequential systems (which combine several practices). The SWP3 shall include an explanation of the technical basis used to select the practices to control pollution where flows exceed pre-development levels.

ii. Velocity dissipation devices shall be placed at discharge locations and along the length of any outfall channel to provide non-erosive flow velocity from the structure to a water course so that the natural physical and biological characteristics and functions are maintained and protected (e.g., no significant changes in the hydrological regime of the receiving water).

XXXX.11 UNIFORM DESIGN STANDARDS

The Engineering department of the City of Barberton have established these uniform design standards for all drainage systems, public or private, which affect more than one owner, so that any individual drainage system will be compatible with any adjacent drainage system. By having all drainage systems compatible, the chance of sedimentation caused by a drainage system failure is greatly reduced.

Conditions

No improvements shall be made unless and until all necessary plans, profiles, and specifications therefore, and the preliminary plat, have been submitted to and approved by the City. The improvements shall be of such sizes, capacities and amounts as are required for the development of the proposed subdivision and of extra sizes as may be necessary to serve nearby land which is an integral part of the neighborhood service drainage areas.

The subdivider shall be required to extend, or petition for the extension of, the improvements to serve adjoining unsubdivided land. If streets or utilities are not available at the boundary of a proposed subdivision, the Planning Commission may require the subdivider to construct, or petition for the construction of, off-site extensions of the improvements. Procedures for providing any necessary public lands, extra-size and off-site improvements and general standards for prorating costs are set forth in the Subdivision Regulations of the City of Barberton.

Design Storm Criteria

Meeting the following standards and criteria does not relieve any person from liability from storm damage to another person's property.

Design Storms

The primary drainage system is that part of the storm drainage system which is used regularly for collecting, transporting, and disposing of storm-water runoff, snow melt, and other miscellaneous minor flows. The capacity of the primary drainage system should be equal to a maximum rate of runoff expected from a design storm of established frequency or given intensity. For design by the Rational Method or the SCS TR-55 Method, the following return frequency storms will be used.

Structure Type	Primary Design Storm
	Rational or Tr-55 Methods
Culverts	**10 Year**
Drive Culverts	**10 Year**
Open Drainage Swales	**10 Year**
Roadside Ditches	**10 Year**
Storm Sewers	**10 Year**
Bridges	**100 Year**
Flood plain Structures	**100 Year**

The secondary drainage system is that part of the storm drainage system which carries the runoff which exceeds the capacity of the primary drainage system. The secondary drainage system should have the capacity to carry runoff from a storm with a return period of 100 years without posing significant threat to public safety or property.

Primary Storm Design Criteria

1. Conduits shall be designed on the basis of flowing full with surcharge to the gutter line. Backwater effects shall be considered.

2. Depth of flow in natural channels shall not exceed full stage, backwater effects considered.

3. Depth of flow in roadside ditches shall be of such depth that the flow will not exceed the ditch capacity and flow onto private property except at designated discharge points. Proposed water surface elevation shall not exceed 1' below the proposed edge of pavement elevation.

4. Depth of flow in streets with curb and gutter shall not exceed the curb height. Velocity of flow in the gutter at design depth shall not exceed ten feet per second. In addition to the above, the following are maximum encroachments of the primary design storm onto the pavement:

   a)For Minor and Collector Streets, the spread may not exceed 8 feet.

   b)For Major Streets, one lane of the traffic in each direction shall be free from water.

Secondary Storm Design Criteria

The secondary storm floodway and floodway fringe for natural streams shall be as defined by the U.S. Army Corps of Engineers, the U.S. Department of Housing and Urban Development, or the Ohio Department of Natural Resources, where such determinations have been made.

Many of the drainageways associated with the secondary storm systems are in areas beyond those designated as floodway or floodway fringe areas. For these areas, the secondary storm flood limits shall be determined by accepted methods of determining water profiles using the secondary design storm runoff. One foot elevation shall be added to the flood profile as freeboard for protection in the event of future encroachments into the floodway fringe of the secondary drainageway.

When a street is designated as the secondary drainageway, the depth of flow shall not exceed 9" at the gutter line for local and collector streets and shall not exceed 3" depth at the crown for arterial and freeways. The same maximum depth criteria will apply where a secondary drainageway crosses the street. Where a secondary drainageway is located outside a street right-of-way, easements shall be provided as necessary to accommodate the storm event.

In determining the required capacity of surface channels and other drainageways used for secondary storm runoff, the street storm inlets and conduits provided for the primary design storm shall be assumed to be carrying their design capacity.

Erosion Control

Any work within the City shall comply with the Erosion and Sediment Control Regulation (Ordinance 147-2003). An erosion control plan shall be submitted to the Summit Soil & Water Conservation District for review and approval for all sites greater than one (1) total acre. An NPDES permits shall be obtained from the OEPA when required.

Contractor shall follow the best management practices for the control of sediment on the site. Necessary erosion control devices shall be installed prior to earthwork activities.

Extra-Size and Off-Site Improvements

Extra size and off-site improvement costs are subject to Subdivision Regulations.

Flood Plain

If any portion of the land within the subdivision is subject to inundation or flood hazard by storm water, such fact and portion shall be clearly indicated on the preliminary and final plats by a prominent note on each sheet of such map whereon any such portion shall be shown. Natural watercourses shall be indicated on the preliminary and final plats in like manner.

Land subject to flooding, and land deemed by the Planning Commission to be otherwise uninhabitable, shall not be platted for residential occupancy or for such other uses as may increase danger to health, life or property, or aggravate the flood hazard.

Footer Drains

If required by the City Engineer, any new footer drains shall be routed to a sump where the water will be pumped to an unobstructed gravity drain. The storm drains shall be connected to the public storm sewer if possible. No footer drain will be permitted to tie directly into the public storm sewer unless it can clearly be shown that the proposed footer drain will not surcharge in any storm.

Maintenance of Drainage Systems

Any portion of the drainage system, including on-site and off-site storage facilities, that is constructed by the developer will be continuously maintained by the owner or owners subsequent in title of the affected lands unless it is officially accepted by the City for maintenance. The developer shall cause the maintenance obligation to be inserted in the chain of title to the affected lands as a covenant running with the land in favor of the City.

Exhibit 1 - Primary and Secondary Drainage Detail

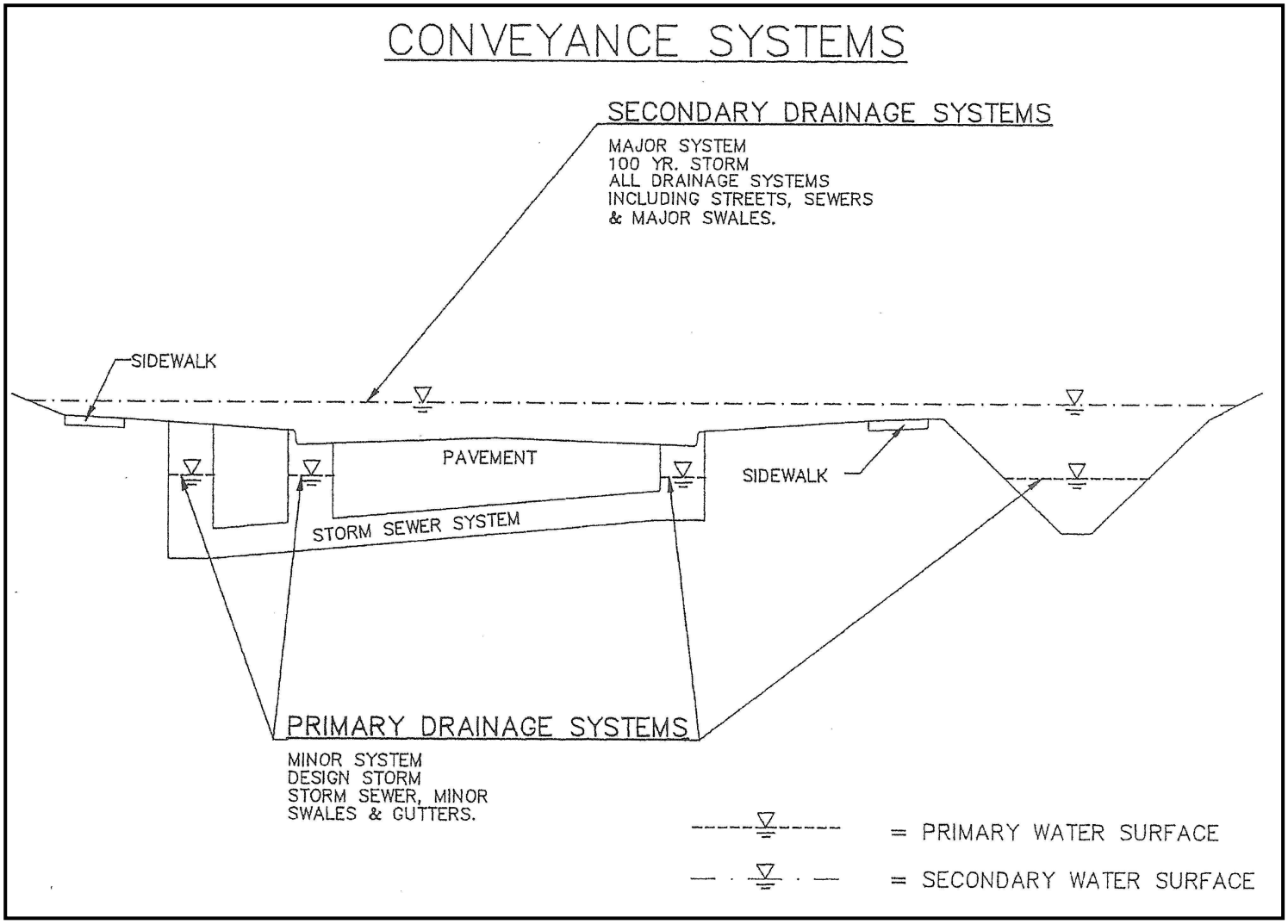

Easements

Access to flood control or storm drainage facilities for emergency, inspection, maintenance and improvement purposes, shall be provided as follows:

A. Access to flood control or storm drainage ditches, channels and storage facilities, shall be by means of easements. Such easements shall be not less than twenty feet in width.

B. Access along flood control or storm drainage ditches and channels, shall be by means of easements. Such easements shall be not less than twenty feet in width, exclusive of the ditch, channel or other facility it is to serve. An easement of this type shall be provided on one side of the flood control or storm drainage ditch, channel or similar facility.

C. Access around storage facilities shall be a minimum ten feet easement in the case of detention or dry basins and a minimum twenty-five feet easement in the case of retention or wet basins. The width shall be measured from the design high water level and shall include the storage facility itself. The approving agency may require easements in excess of the minimums.

D. Easements for emergency flow ways shall be a minimum fifteen feet in width.

E. Flood control or storm drainage easements containing underground facilities shall have a minimum width of twenty feet.

Natural Channels

Where a subdivision is traversed by a drainageway, channel or stream, a stormwater easement or drainage right-of-way, conforming substantially with the lines of such watercourse, shall be provided. The easement shall be a minimum twenty feet wide or of such further width as adequate for the purpose and generally parallel with the rear or side lot lines.

Natural Features

Due consideration shall be given to preserving outstanding natural features such as scenic spots, water bodies or exceptionally fine groves of trees. Dedication to and acceptance by a public agency are usually the best means of assuring their preservation.

Pipe Removal Policy

The following should be used by the designer as a guideline for determining whether an existing pipe that is taken out of service, regardless of type, should be abandoned or removed:

A. Pipes 8 inches in diameter or less, regardless of depth or height of fill, may be abandoned in place.

B. Pipes 10 inches through 24 inches in diameter or rise with less than 3 feet of final cover should be removed or filled; with more than 3 feet of final cover they may be abandoned in place. (The designer should use discretion in removing small pipes under existing rigid pavement or base which is to remain in place.)

C. Pipes over 24 inches in diameter or rise should generally be removed. (The designer should use discretion in removing any pipe with more than 10 feet of cover)

D. Where it is necessary to maintain service of small unrecorded storm drain connections to a storm sewer being taken out of service, but this cannot be assured without removal of that sewer; the storm sewer shall be removed.

Rainfall in the City of Barberton

Introduction

Rainfall information is basic to the design of all storm facilities. Rainfall is a natural event and precise projections of its frequency and intensity cannot be made. However, useful information can be obtained by analysis of past storms. Reasonable predictions of the frequency of occurrence (recurrence interval), the duration, the amount, the distribution of the amount with respect to area, the distribution of the intensity with respect to time, and the seasonal probability of an occurrence can be made.

Rainfall Intensity - Duration - Frequency

The most familiar presentation of rainfall data is a set of curves representing different frequencies of occurrence of rainfall events with the intensity of the rainfall plotted against its duration. A series of intensity - duration - frequency curves for rainfall in Barberton, Ohio had been derived from the data published in USDA Technical Paper No. 40.

Intensity-duration-frequency curves have been developed using these values and are shown in Exhibit 2. These curves shall be used in conjunction with the Rational Method for calculating runoff.

The equations for the intensity-duration-frequency curves were developed in accordance with FHWA HEC-12, March 1984. The base equation is as follows:

i = intensity in inches per hour
t = time of concentration

$$i = \frac{a}{(t+b)^m}$$

a, b, and m are constants given in the following table for each frequency storm

Design			
Year	**a**	**b**	**m**
1	**33.102**	**13.49**	**0.820**
2	**44.150**	**8.900**	**0.835**
5	**150.271**	**18.400**	**1.062**
10	**70.474**	**10.200**	**0.874**
25	**96.280**	**11.100**	**0.899**
50	**51.622**	**5.100**	**0.747**
100	**85.930**	**8.000**	**0.834**

Rainfall Distribution by Time

Rainfall intensity - duration - frequency curves give a value of the intensity of rainfall during a particular time interval but do not necessarily present the sequence of events during a storm. The rainfall event causing storm runoff from a watershed for which this text is intended will most probably be in the nature of a thunderstorm or frontal storm. These storms are characterized by a period of rainfall of gradually increasing intensity with a comparatively short intense mid-storm followed by additional rainfall of gradually decreasing intensity. Each storm is a separate distinct event, however, with enough of a common pattern that an intensity distribution with time can be developed for use where such information is required to estimate storm runoff, such as in development of hydrographs.

Summit Soil & Water Conservation Service has developed several typical storm distributions. Their Type II Storm is most suitable for rainfall of the summer thunderstorm type as occurs in Ohio. This distribution is based on the 24 hour rainfall for a given recurrence interval with the accumulation to a given hour shown as a ratio of the total 24 hour rainfall amount.

The City of Barberton has adopted the 24 hour rainfall values from The National weather service as shown in table below. These values shall be used in conjunction with the TR-55 Tabular and Graphical Peak methods for calculating runoff and sizing detention basins.

The 24 hour total rainfall for the City of Barberton is as follows:

Table IV-1

Recurrence Interval Years	24 Hour Rainfall Total Inches
1	2.04
2	2.44
5	3.04
10	3.54
25	4.28
50	4.92
100	5.61

Although this distribution is based on 24 hour duration of storm, almost 64% of the rainfall occurs in the 4 hour period between the 10th and 14th hours and 27.6% in the 15 minute interval proceeding the 12th hour.

Rainfall Distribution by Area

The data given in the tables and exhibits is for point rainfalls but should be valid for areas up to 10 square miles. Other methods such as U.S.G.S Water Resources Investigations Report 93-4080, and U.S.G.S. Open-File Report 93-135 will be considered. For larger watersheds, U.S.G.S Water Resources Investigations Report 89-4126 or S.C.S TR-20 may be used.

Exhibit 2 – Rainfall – IDF Curve

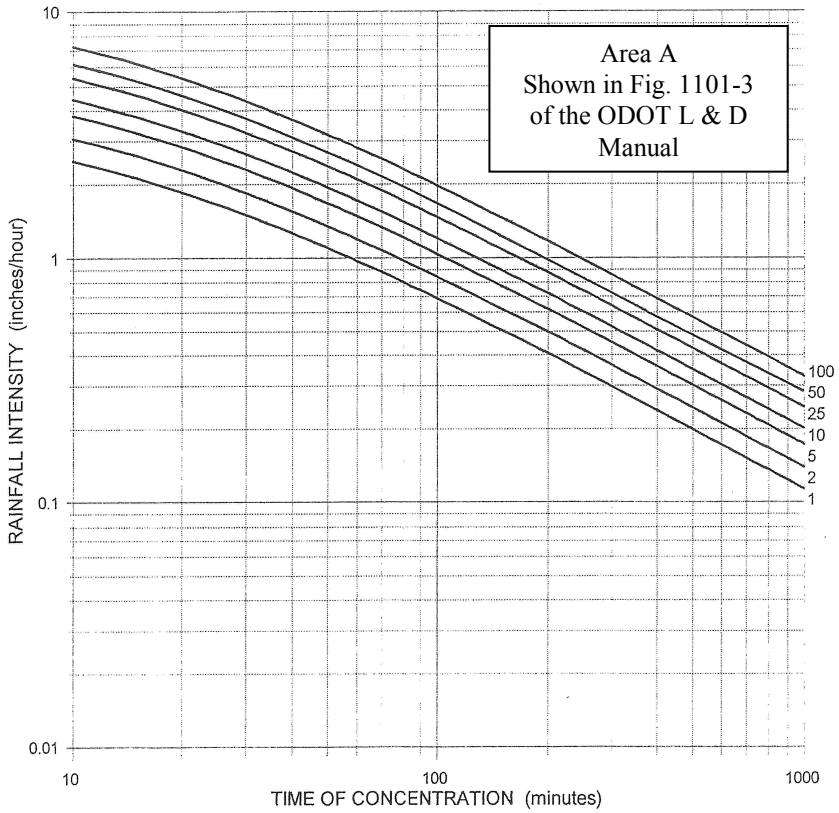

Storm Runoff Calculation Methods

The following methods are currently accepted by the City. All storm calculations must be performed by a Registered Professional Engineer in the State of Ohio, and submitted with improvement plans for review.

Rational Method

The Rational Method may be used to determine peak rate of runoff from areas generally not larger than 200 acres. The other methods discussed later in this chapter may also be used to obtain peak rate of runoff.

The basic formula for the Rational Method is Q = C*I*A in which:

Q = Peak rate of runoff in cubic feet per second.

C = Runoff coefficient, an empirical coefficient representing a relationship between rainfall and runoff.

I = Average intensity of rainfall in inches per hour for the time of concentration (Tc) for a selected frequency of occurrence or return period.

Tc = Time of concentration, the estimated time required for runoff to flow from the most remote part of the area under consideration to the point under consideration. It consists of the total of time for overland sheet flow, open channel flow, and pipe flow.

A = Area drained in acres.

The Rational Method procedures for calculating peak rates of runoff are as follows.

1. Drainage areas must be determined using existing topographic maps or actual field surveys. A drainage map should be developed showing the sub-areas draining to the outlet. These sub-areas should be planimetered to determine the acreage under consideration.

2. Runoff coefficients are dependent upon the land use and the soil classification. Land use of the drainage area shall be determined from aerial photography or field survey. Soil classifications can be determined from the Soil Conservation Service Soil Survey Maps, available from the Summit County SWCD Office. The soil classifications must be delineated in the site plans. The soil classifications are divided into four Soil Groups. Common soils found in Barberton and their respective Soil Groups are given in Exhibit 7.

3. Once the land use and the soil groups are determined, values for runoff coefficient 'C can be obtained from Exhibit 3. If the land use and soil group varies over the drainage area, a composite runoff coefficient can be calculated as an average of the sub-area coefficients, weighted by area.

4. The intensity is dependent upon the time of concentration 'Tc' which must be calculated first. The conveyance system used to determine Tc must be shown on the drainage map including slope and distance of each flow segment. Tc can be obtained from Exhibit 4 for short distances. For larger drainage areas, other methods as explained in Chapter 3 of TR-55 may be used. Once Tc is determined, an intensity can be obtained for any design frequency storm.

5. The rainfall intensity is obtained from Exhibit 2.

6. Peak runoff can be calculated by substituting these values into the formula.

Barberton Modified Rational Method

Hydrograph Methods

For areas larger than 200 acres or where it is necessary to know the volume of water discharged in addition to the peak rate of discharge, the Rational Method is not adequate. There are numerous adoptions of the hydrograph method available which present a reasonable compromise considering data required, complexity of computations, and information obtained.

Of various unit hydrograph methods, the one especially appropriate in addressing problems relating to changes in storm runoff due to changes in land use is outlined in "Urban Hydrology for Small Watersheds," Technical Release No. 55 (TR-55), Engineering Division, Soil Conservation Service (SCS), U.S. Department of Agriculture, 1986. This publication can be obtained by contacting the local S.C.S. office. A brief description of this method is presented for use with this design manual.

The methodology of the S.C.S. explained in Technical Release No. 55 can be used to provide peak rates of runoff, tabular values of rate of runoff versus time from which a hydrograph can be plotted, estimated total volume of runoff or estimated volume of storage required to reduce rate of runoff to a desired value. The basic information required is:

1. Area of the watershed.
2. Soil type
3. Land use
4. Time of concentration
5. Travel time - Time of flow from the point of collection of the water in the design watershed to a point of evaluation or design. This is required when combining hydrographs from more than one watershed or where channel routing is considered.
6. Watershed factors: Slope, Flow length, Natural ponding.
7. Design Storm based on 24-hour duration rainfall for design recurrence interval.

Exhibit 3 – Runoff Coefficient – Rational Method

RUNOFF COEFFICENTS

RATIONAL METHOD

LAND USE DESCRIPTION			HYDROLOGIC SOIL GROUPS			
			A	B	C	D
Cultivated land:	without conservation treatment		0.32	0.50	0.66	0.74
	with conservation treatment		0.17	0.30	0.43	0.50
Pasture or range land:	poor condition		0.26	0.45	0.61	0.69
	good condition		0.05	0.16	0.36	0.47
Meadow:	good condition		0.05	0.13	0.30	0.43
Wood or Forest land:	thin stand, poor cover, no mulch		0.05	0.23	0.41	0.54
	good cover		0.05	0.10	0.29	0.41
Open Spaces, lawns, parks, golf courses, cemeteries, etc.						
good condition:	grass cover on 75% or more of the area		0.05	0.16	0.36	0.47
fair condition:	grass cover on 50% to 75% of the area		0.05	0.28	0.45	0.57
Commercial and business areas (85% impervious)			0.69	0.77	0.83	0.86
Industrial districts (72% impervious)			0.50	0.66	0.74	0.80
Residential:						
Average lot size		Average % Impervious				
1/8 acre or less		65	0.41	0.59	0.72	0.77
1/4 acre		38	0.16	0.37	0.54	0.64
1/3 acre		30	0.12	0.32	0.50	0.61
1/2 acre		25	0.09	0.29	0.47	0.59
1 acre		20	0.06	0.26	0.45	0.57
2 acres			0.05	0.23	0.41	0.50
Paved parking lots, roofs, driveways, etc.			0.96	0.96	0.96	0.96

The coefficients are applicable for a ten year storm frequency.

For recurrence intervals longer than ten years, the indicated runoff coefficients should be increased assuming that nearly all of the rainfall will become runoff and should be accommodated by an increased runoff coefficient.

Exhibit 4 – Time of Concentration Chart – Rational Method

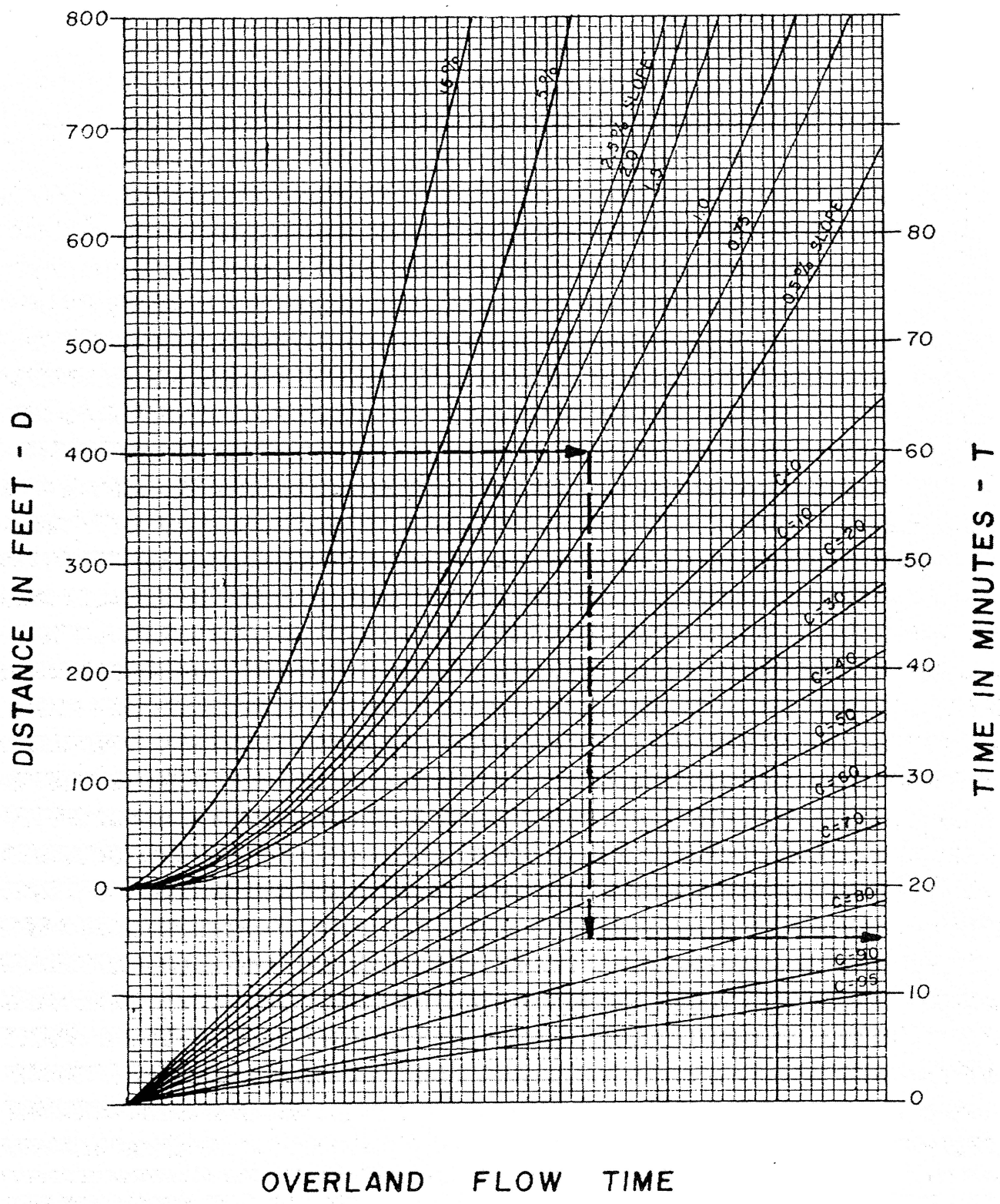

Exhibit 5 – Runoff Curve Number

RUNOFF CURVE NUMBERS

(ANTECEDENT MOISTURE CONDITION II)

LAND USE DESCRIPTION			HYDROLOGIC SOIL GROUPS			
			A	B	C	D
Cultivated land:	without conservation treatment		72	81	88	91
	with conservation treatment		62	71	78	81
Pasture or range land:	poor condition		68	79	86	89
	good condition		39	61	74	80
Meadow:	good condition		30	58	71	78
Wood or Forest land:	thin stand, poor cover, no mulch		45	66	77	83
	good cover		25	55	70	77
Open Spaces, lawns, parks, golf courses, cemeteries, etc.						
good condition:	grass cover on 75% or more of the area		39	61	74	80
fair condition:	grass cover on 50% to 75% of the area		49	69	79	84
Commercial and business areas (85% impervious)			89	92	94	95
Industrial districts (72% impervious)			81	88	91	93
Residential:						
	Average lot size	Average % Impervious				
	1/8 acre or less	65	77	85	90	92
	1/4 acre	38	61	75	83	87
	1/3 acre	30	57	72	81	86
	1/2 acre	25	54	70	80	85
	1 acre	20	51	68	79	84
	2 acres		47	66	77	81
Paved parking lots, roofs, driveways, etc.			98	98	98	98
Streets and roads:						
	paved with curb and storm sewers		98	98	98	98
	gravel		76	85	89	91
	dirt		72	82	87	89

For a more detailed description of agricultural land use curve numbers, refer to S.C.S. National Engineering Handbook, Section 4, Hydrology, Chapter 9, August 1972.

The remaining pervious areas (lawn) are considered to be in fair condition for these curve numbers.

SOURCE: S.C.S. Urban Hydrology For Small Watersheds. T.R. No. 55

Exhibit 6 – Time of Concentration Chart – TR55 Method

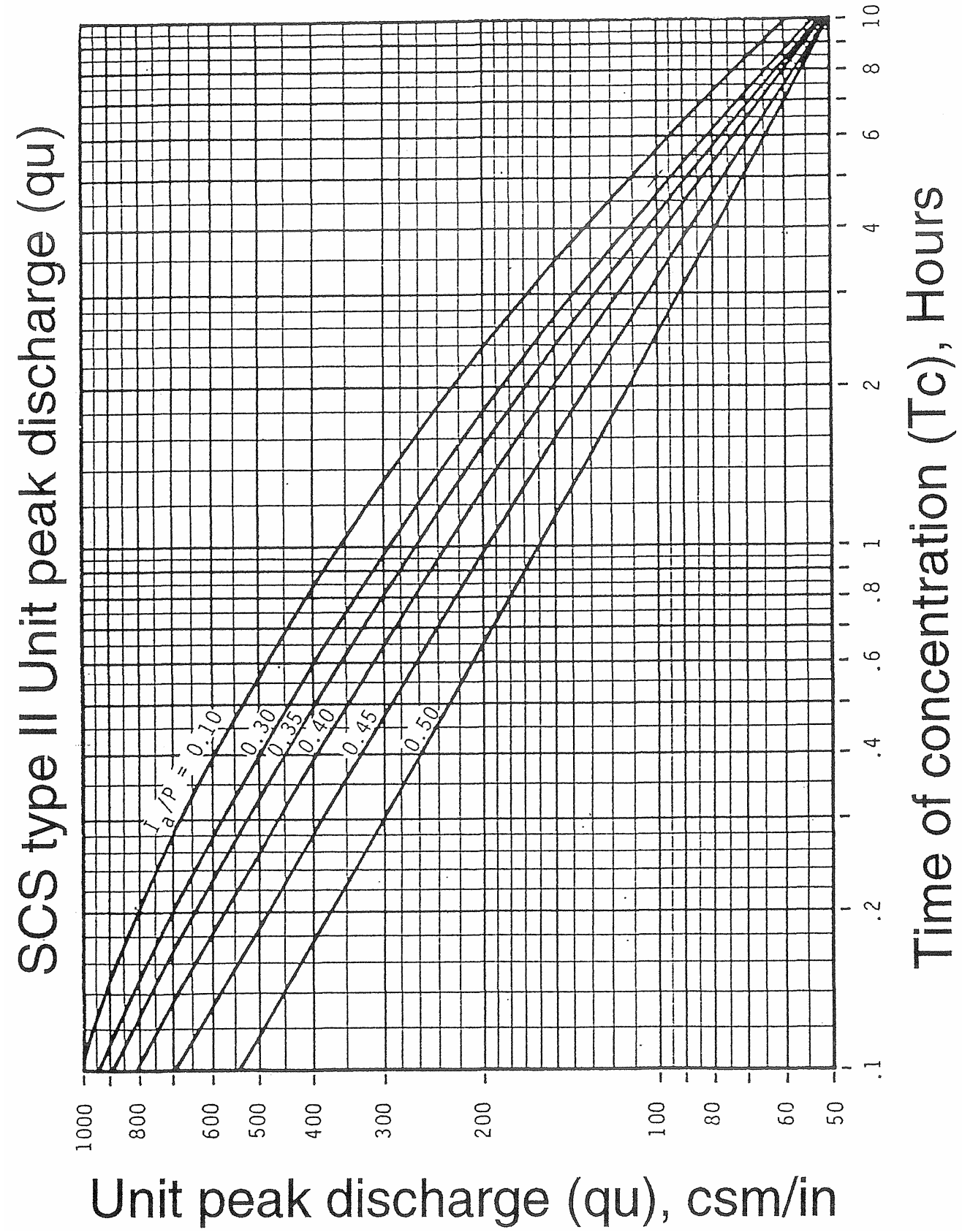

Graphical Peak Discharge Method

Where peak rate of flow and total volume of runoff are needed, the Graphical Peak Discharge Method of Chapter 4 of S.C.S. TR-55 may be used.

The general procedure for determining peak discharge and total runoff volume from an area is as follows:

1. Determine the total acreage in the study area.

2. Determine average slope of the study area.

3. Delineate the different soil types according to hydrologic soil groups using soil survey maps and Exhibit 7.

4. Delineate the various land use areas according to Exhibit 5. (*** See Note)

5. Subdivide the total area into sub-areas according to hydrologic soil groups and land use and assign the runoff curve numbers from Exhibit 5.

6. Calculate the weighted runoff curve number i.e., Weighted CN = sum (CN of sub-area x sub-area) / sum(sub-areas).

7. Determine the precipitation (P) or total rainfall depth for the design storm of chosen frequency and 24 hour duration. See Table IV-1 for 24 hour rainfall data.

8. Calculate the potential maximum retention after runoff begins in inches (S), using the formula:

$$S = \frac{1000}{CN} - 10$$

9. Determine direct runoff in inches (Qro) using equation: $$Qro = \frac{(p - 0.2s)^2}{(p + 0.8s)}$$

10. Determine the time of concentration (Tc) and travel time (Tt) for the drainage area.

11. Determine the Unit peak discharge (Qu) in csm/in using Exhibit 6.

12. Determine the Peak discharge in cfs (Qp) using the equation: $$Qp = \frac{A * Qro * Qu}{640}$$

13. Determine the total volume of runoff in cf using the equation:

$$Vr = \frac{Qro * A * 43560}{12}$$

*** Note: Curve Numbers for pre-developed on-site land uses for undeveloped parcels shall not exceed values given for Open Space - fair condition.

Tabular Method

If the rate of runoff, with respect to time, is needed in addition to the peak discharge rate and total runoff volume, the Tabular Method as outlined in Chapter 5 of SCS, Technical Release No. 55, 1986 should be used. The information required is the same as for the peak discharge method. The tabular hydrograph method may be used to determine the effects of structures and combinations of structures including channel modifications, at different locations in the watershed. This method produces a runoff hydrograph which is useful in defining outflow characteristics for given control structures.

HYDROLOGIC SOIL GROUP **Exhibit 7 - Summit County Soils – Hydrologic Groups**

Soil Group	Map Symbols Found in Soil Survey	Hydrologic Soil Group
Berks	BeF	C
Bogart	BgA, BgB, BhB	B
Canadice	Ca	D
Caneadea	CcA, CcB	D
Canfield	CdA, CdB, CdC, CdC2, CeB, CfB, CfC	C
Carlisle	Cg	A/D*
Chagrin	Ch, Ck, Cm	B
Chili	CnA, CnB, CnC, CoC2, CoD2, CpA, CpB, CpC, CuB, CuC, CwC2, CwD2,	B
Conotton	CyD, CyE, CyF	B
Damascus	Da	B/D*
DeKalb	DkC, DkD, DkE, DkF	C
Ellsworth	ElB, ElC, ElC2, ElE2, ElF2, EsB, EsC, EuB, EuC	C
Fitchville	FcA, FcB, Fn	C
Geeburg	GbB, GbC2, GbD2	C
Glenford	GfA, GfB, GfC2, GfD2, GoB, GoC	C
Haskins	HcB	C
Holly	Ho, Hy	B/D*
Jimtown	JtA, JtB, Ju	C
Linwood	Ld	A/D*
Lobdell	Le	B
Lorain	Ln	C/D*
Luray	Ly	C/D*
Mahoning	MgA, MgB, MlB, Mn	D
Mitiwanga	MtB	C
Olmsted	Od	B/D*
Orrville	Or	C
Oshtemo	OsA, OsB, OsC	B
Ravenna	ReA, ReB, Rn	C
Rittman	RsB, RsC, RsC2, RsD, RsD2, RsE2, RtB, RtC, RuB, RuC	C
Sebring	Sb	D
Wadsworth	WaA, WaB, Wd	C
Wallkill	Wc	C/D*
Willette	Wt	A/D*
Wooster	WuB, WuC, WuC2, WuD, WuD2, WuE2, WuF2, WvC2, WvD2, WwD	C

*Note: Two Hydrologic Soil Groups Such as A/D, B/D or C/D indicates the drained/undrained condition.

Runoff Control Methods

Introduction

The runoff control criteria stated previously necessitates the use of storm runoff control facilities in most developments. If designed properly, these facilities can be incorporated into the design and offer an added amenity to the urban environment. If designed poorly, these facilities have the potential for adding to neighborhood blight or a threat to public health and safety.

Storm storage facilities can be functional and wholly unobtrusive. This positive impact can be achieved by adherence to four basic steps in the implementation of storm storage facilities.

These are:

1. Proper selection of runoff control mechanism.
2. Proper design of facility.
3. Construction of facility in strict adherence to design.
4. Regular maintenance program and designated responsibility for maintenance.

This section discusses these steps which result in a rewarding and often cost-saving approach to storm management.

Detention/Retention Structures

Structures for detention or retention of storm may be considered together since the major control structures function the same for each. The principal difference is that while the control mechanism for detention or (dry basins) may be entirely passive, there should be some manner of movable gate provided in a retention or (wet basin) so that it can be drained for occasional maintenance.

The results of applying detention or retention storage methods for peak discharge control are illustrated by the typical hydrographs shown in Exhibit 8. The objective of both methods is to reduce the peak rate of discharge by storing the storm runoff and controlling the release rate. The difference in discharge rates shown is a function of the control devices rather than the type of detention/ retention basin.

Infiltration of the stored storm will occur to some degree depending on underlying soil characteristics. However, in most cases, the amount of infiltration is minimal and is not considered as a part of the structural design. Thus, the total area under the hydrographs representing total volume of runoff will be substantially the same for all three cases.

Land requirements are associated with any storage facilities. The demand for land is a major economic factor. For this reason, consideration of the multi-use concept for either wet or dry detention structures is strongly encouraged.

Detention and retention structures can be categorized as: dry basins, permanent (wet) ponds, storage tanks, and multi-use storage areas such as parking lots, roof tops, underground storage, roadway embankments and other shallow holding areas. Design criteria of the various types are discussed in the following section.

Exhibit 8 – Typical Hydrographs

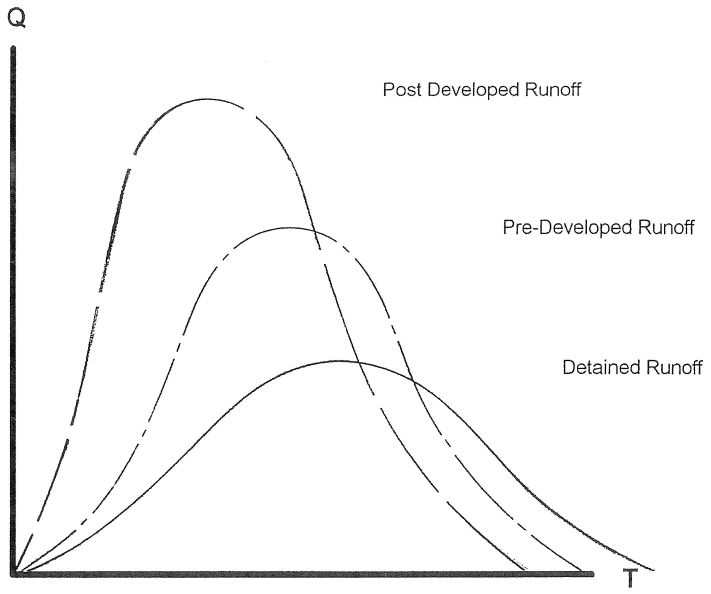

DISCHARGE (Q) - VS - TIME (T)

TYPICAL HYDROGRAPHS

Design Criteria for Detention/Retention Structures

The following criteria are recommended as standards of design. The criteria is intended to provide limits on the design of structures so performance objectives can be achieved, but allow flexibility in the actual design of the individual basins. Drawings of typical structures are included. Again, these drawings are not to be taken as the actual design configuration for all applications, but are included only as a guide for design.

Dry Basins

Dry basins are surface storage areas created by constructing an embankment or excavating a basin. These basins include an outlet structure which is designed to control the rate of discharge from the basin. As storm surcharges the outlet structure, the excess flow temporarily backs up into the basin, and is metered out at a controlled rate after the rainfall ceases. The discharge control structure for most dry detention basins is usually a multi-stage device.

Design Criteria

1. Maximum release rate shall be determined as stated in Section XXXX.10. The allowable peak discharge for all storms up to and including the critical storm shall be the 1 year predeveloped peak discharge. Once the critical storage volume is reached, the allowable discharge is increased to the pre-developed peak discharge for each successive storm occurrence.

2. The required storage volume shall be determined by the Graphical Storage Method or the Storage Indication Method.

3. The side slopes of the detention/retention basin, unless paved or rip-rapped, shall not exceed 4:1 to insure safety and maintenance capability. The bottom of the basin shall be sloped at a minimum 1% grade to the outlet control device. The 1 year pre-developed flow shall be carried by pipe through the basin.

4. Any constructed embankments for permanent or temporary impoundment of water are subject to jurisdiction under the Ohio Dam Safety Laws (ORC 1521, 1987) as administered by the Ohio Department of Natural Resources (ODNR). Exemptions are allowed, depending upon the relationship of the height of the dam, the volume of storage and the drainage area.

5. Maximum water depths in dry basins should be held to a minimum, with an absolute maximum of 10 feet.

6. The minimum top width of any embankment used for detention should be five feet.

7. The outlet control devices may be either single-stage or multi-stage structures. They shall be designed such that the permissible release rates are not exceeded at the calculated head for the design storage volume. The discharge control structure will normally be located at the bottom of the basin near the downstream end. The control outlet device shall be at the absolute lowest point of the basin.

8. All storm frequencies up to and including the 100 year storm shall be controlled through the primary and/or a secondary control structure. All earthen embankments shall have a minimum freeboard of three inches (3") above the maximum calculated water surface elevation to the top of dam.

9. Flow control structures should preferably be constructed of reinforced concrete (pre-fabricated or cast in place). The control structures shall be designed and constructed such that the public health, safety and welfare is fully protected. Any exposed face greater than 4' in height shall have adequate handrails. Standard aluminum or plastic coated manhole steps shall be provided for any outlet structure over 36" in depth.

10. A 50 percent increase in the net area of grates for inlets is recommended to allow for possible blocking of the inlets by debris. A typical grated inlet is shown in Detail No. 6. Trash screen shall be installed between the inlet pipe and the outlet control orifice.

11. The outlet channel shall include adequate provision for energy dissipation and erosion protection.

12. No storage volume will be required for off-site upstream areas. Flows from off-site areas in excess of the allowable discharge from the on-site area may be routed either around or through the detention/retention basin. Provision for excess flow routed through the storage facility shall be included in the design of the emergency spillway. The emergency spillway shall be designed for overflow rates based on the runoff predicted from the 100 year design storm.

13. Fencing around the storage facility in a manner which attempts to prevent access is generally undesirable. However, barriers to access may be desirable to limit the area reserved for storm control. When required, these barriers should be designed with consideration given to the aesthetics of the site and nearby area. Landscaping and grading or natural wood fencing can offer suitable barriers.

14. Provisions for erosion and sediment control during construction should be included in the design of the storage facility. The four major design considerations of erosion and sediment control during construction are:

    a) Disturb as little of the site as possible.

    b) Cover the soil as soon as possible.

    c) Control the rate of runoff by using temporary energy dissipaters and control structures where necessary.

    d) Allow sediment to settle out of the stormwater before leaving the site.

15. A storage facility is an integral part of the adjacent environment and, therefore, should serve an aesthetic improvement of the area. The use of landscape principles is encouraged and, in some cases, may be required for certain sites. In any event, the planting and preservation of the desirable trees and other vegetation should be a part of the storage facility design.

16. Typical design configurations of the on-site detention basins are included in Detail No. 35.

17. Easements shall be required per Section XXXX.11 - Easements.

18. An emergency spillway shall be included which shall have a capacity for the runoff from a 100 year storm with three inches (3") of freeboard.

19. The calculated water surface elevations of the storage facility shall be indicated on the detailed plans for the critical design storm and the 100 year frequency storm.

Wet Ponds

Wet ponds are permanent ponds where additional storage capacity is provided above the normal water level and special features for controlled release are included. Historically, wet ponds have proven extremely effective in abating increased runoff and channel erosion from urbanized areas. They are a major Soil Conservation Service land treatment practice.

Some problems often encountered with wet ponds are: site reservation (land requirements), permanent easements, complexity of design and construction, safety hazards and maintenance problems. Because of large land requirements and the necessity of maintaining a permanent pool of water, wet ponds have a broader application for instream control where large watershed areas are involved compared to their use as on-site facilities for small urban areas. However, the recreational and aesthetic benefits of permanent wet ponds are very often considerable and may be justifiable in certain on-site applications.

Design criteria for dry basin design shall also apply to wet ponds except as modified herein.

1. The maximum permanent pool area shall not exceed 10 percent of the upstream watershed area.

2. The minimum depth from normal pool water level to bottom of side slope should be three feet. It is recommended the shallow perimeter of the pond extend from the bottom of the side slope for a distance of ten feet into the pond area. This is a safety factor in the event of accidental or intentional encroachment into the pond.

3. At least 25 percent of the pond area should be a minimum of 10 feet deep.

4. A suitable means should be utilized to prevent water from becoming stagnant. Natural springs and aeration devices such as fountains are appropriate. Ponds constructed in permeable soils shall be sealed by a suitable method.

5. The top of the embankment width shall be a minimum five feet for non-vehicular traffic and ten feet for vehicular traffic. The retaining structure shall be designed in accordance with the best acceptable design practices and comply with ODNR requirements.

6. A provision shall be included for completely draining the pond to allow periodic cleaning, inspection, and other maintenance. Drain facilities may be an integral part of the flow control structure or a separate structure.

7. The detained volume shall be that amount of stored runoff above the normal pool water surface elevation.

8. Probable quantities of sediment from the drainage area should be estimated for the expected life of the pond, and provisions for occasional sediment removal should be included in the design. Wet ponds may be over-excavated to accommodate siltation from construction activities during development.

9. When a permanent maintenance easement is required, the developer shall provide a minimum 25 feet in width around the perimeter of the wet pond to act as a buffer zone to adjacent properties. The easement is measured from the water's edge for the maximum storage elevation or the outside toe of slope of any embankment.

10. Shoreline protection shall be provided where necessary to prevent wave action erosion. Embankment protection shall also be provided to prevent erosion.

Parking Lot Storage

Parking lot storage is surface storage where shallow ponding is designed to flood specifically graded areas of the parking lot. Controlled release features are incorporated into the surface drainage system of the parking lot. This method can easily be incorporated into a site development at approximately the same cost as that of a conventional parking lot.

The major disadvantage is the inconvenience to users during storms requiring storage. This inconvenience can be minimized with proper design consideration. Parking lot design and construction grades are critical factors. This method is intended to control the runoff directly from the parking area, and is usually not appropriate for storing large runoff volumes.

Design criteria for dry basin design shall also apply to parking lot storage except as modified herein.

1. The water depth in the storage area shall not exceed twelve inches and/or nine inches within parking spaces.

2. The maximum surface slope of the storage area shall be 4 per cent and the recommended minimum slope is 0.5 percent.

3. Off-site drainage shall be directed around parking lot storage.

4. The parking lot shall be completely drained in the minimum time permissible within the constraints of the runoff control standards.

5. The storage area should be located in the more remote, least used, portion of the parking facility, if possible.

6. Provisions shall be included for overflow of runoff above the design storm, such as uncontrolled drainage structures near the ponding area or secondary overland swales.

7. Parking lots being used for storm detention shall be constructed of concrete pavement with sealed joints. Asphalt pavement may be used if the required storage volume is increased by 1/3 to accommodate future resurfacing.

Rooftop Storage

Rooftop storage is surface storage provided on flat rooftops designed with provisions for temporary ponding and with special roof-drain-controlled release features. Rooftop storage utilizes the built-in structural capability of rooftops to store certain amounts of rainfall.

Existing and/or proposed structures shall conform to all local building codes to meet the requirement of being able to support a specified storage volume. It usually performs a retention function since the method is to hold the stored water for a relatively long time while draining gradually. For this reason, directing the drained water to lawn areas and infiltration trenches where it can percolate is possible.

The main disadvantages of rooftop storage are the inspection and maintenance requirements. Routine inspections are difficult when the installations are not readily accessible. Clogging of the roof drains make routine inspections a necessity. This method is discouraged by the City.

Minimum design criteria for rooftop storage shall be as follows:

1. The rooftop shall be completely drained within the minimum time permitted under the runoff control standards.

2. A minimum roof pitch of 0.25 inch per foot to the outlet device shall be provided to assure complete drainage.

3. Overflow drains shall be provided to accommodate major storms, and shall be located above the maximum water depth. Roof scuppers are to be provided in parapet walls.

4. The building structure shall be designed to provide a watertight roof. Additional layers of roofing membrane or coating are recommended to provide a watertight seal.

5. It is recommended the flow control device be in compliance with the local building code and the National Plumbing Code. Several types of fixed and variable capacity flow control devices (roof drains) are available commercially.

6. The design of other storage control methods in combination with rooftop storage, such as infiltration or storage trenches, is appropriate.

Underground Storage Tanks

Underground storage tanks may be constructed in lieu of surface storage facilities. Storage tanks may be constructed of reinforced concrete either pre-fabricated or poured-in-place, corrugated aluminum or approved equal. Construction and maintenance costs make this method relatively expensive. Therefore, this method is most applicable where land area is very valuable, such as in industrial and commercial areas.

Design criteria for dry basin design shall also apply to underground storage tanks except as modified herein.

1. The structural design shall be in accordance with current design practice. Any underground storage facilities under pavement shall be designed to withstand traffic bearing loads.

2. The minimum size drainpipe shall be eight inches.

3. An access hatch or manhole shall be provided for inspection and maintenance. All openings shall be properly secured to minimize safety hazards.

4. The required storage volume, discharge release rate, and detention period shall be as determined for surface storage facilities. A flow control device, such as a simple weir or orifice shall be included.

5. Overflow provisions shall be included to accommodate the less frequent storms up to and including the 100 year storm runoff.

6. The storage tank shall include provisions for completely draining the tank.

7. When conduits are used for storage, special consideration shall be given to the structural strength and load-carrying capacity of the conduit as well as the bearing capacity of the soil. Perforated pipe may be used where soil conditions are favorable for infiltration methods.

Infiltration for Runoff Control

Infiltration methods seek to restore the naturally occurring process of the hydrologic system by permitting stormwater to percolate into the ground. The degree to which infiltration of storm can be utilized depends on the physical characteristics of the soil or soils and the groundwater system of the area. Obviously, infiltration of storm lessens the amount of rainfall that becomes runoff. Hydrologically, infiltration reduces the total volume of direct runoff and decreases the peak discharge rate. The infiltration process also enhances groundwater recharge.

Current emphasis appears to be toward the use of the infiltration methods only where soil suitability and site conditions are favorable. Soils having slow permeability and shallow depths to bedrock are, understandably, poor locations for infiltration methods.

Sediments, oils and other debris can cause problems by clogging the soil surface resulting in loss of storage capacity. Therefore, installation of infiltration structures near areas where these products are present is discouraged. Infiltration structures usually have a short term life expectancy and maintenance is expensive, thus, unless adequate inspection and maintenance can be provided, the use of structural infiltration methods is discouraged.

In most instances, infiltration methods are not capable of handling large amounts of runoff due to limits of the soil infiltration capacity. Infiltration control methods, therefore, are usually limited to handling relatively small sources of runoff such as roof drains, small parking lots, tennis courts and the like. Infiltration methods may also be incorporated as one part of a large runoff control system utilizing several different techniques. Some specific infiltration structures are dry wells, infiltration trenches and storage trenches.

Dry Wells

Dry wells should be filled with crushed stone or washed gravel of two inch size. Storage volume may be computed by assuming one-third of the storage volume is within the voids between the stones. Therefore, the dry well excavated volume must be three times the required storage volume. Dry wells are most applicable for storing runoff from rooftops and other areas free of sediment and debris. Dry wells are to be located, if possible, in the front of the lot and an outlet control structure must be required. If dry well is located in the back of the lot, an outlet control structure can be provided but may not be required. They may discharge directly into unsaturated soils or the groundwater. Dry wells discharging into an aquifer are subject to regulation and approval by the Ohio Department of Natural Resources.

Storage Volume

Methods for Determining Required Storage Volume

This section examines several methods for estimating the volume requirements of different types of storm storage facilities. The criteria used to choose the appropriate runoff prediction method may also be used to determine the method of estimating storage requirements. Generally, if the Graphical Peak Discharge Method of runoff calculation is appropriate for a given situation, it may be assumed that the Graphical Detention Basin Storage Method are similarly applicable. If the Tabular Method of Unit Hydrograph Method are used for estimating runoff then the Storage Indication Flow Routing Method is most accurate for determining storage capacity.

Graphical Storage Method

The graphical method presented herein is developed by the Soil Conservation Service, presented in Chapter 6 of the "Urban Hydrology for Small Watersheds" Technical Release No. 55. It is based on average storage and routing effects using the storage-indication method of routing. The graphs relate inflow (Qi) and release rate (Qo) to storage requirements for single stage weir or pipe outlet structures.

Divide the peak allowable outflow (Qo = Q 1 year pre-developed) by the peak inflow (Qi = Q critical year developed). Enter the graph at this ratio, move up to the Type II rainfall curve, then move left to the Vs/Vr values. Multiply this obtained value by the volume of runoff (Vr = critical year developed) to obtain the required volume of storage (Vs). Vs should also be calculated for lesser frequency storms to determine if any additional storage is necessary.

For any application where the graphical method is not appropriate, a more accurate flow routing method, such as the storage-indication method, is required to determine storage requirements. Even when flow routing is performed, the volume of storage determined using the Graphical Method will be helpful.

Storage-Indication Flow Routing Method

Flow routing problems are solved by using the continuity equation. The continuity equation is based on the concept of conservation of mass. For a given time interval the volume of inflow minus the volume of out-flow equals the change in volume of storage.

The continuity equation expressed in this simplest form is:

dT (I - O) = S

dT = a time interval

I = Average rate of inflow during the time interval

O = Average rate of outflow during the time interval

S = change in volume of storage during the time interval

The rate of inflow is determined by the inflow hydrograph produced from TR-55 Tabular or other approved methods. The rate of outflow (discharge) is determined by the water surface elevation versus discharge characteristics of the outlet control structure. The change in storage volume is determined by the elevation versus storage volume of the reservoir.

For routing studies, the inflow hydrograph is determined once the design storm and watershed-parameters have been established. Also, the elevation-storage curve is determined by the geometric configuration of the detention basin or reservoir. The elevation-discharge curve is dependent on the hydraulic characteristics of the outlet control structure.

All three graphs must be developed independently prior to performing the Storage-Indication Method of flow routing. Operation Tables are provided in Exhibits 12 & 13.

Design of the Outlet Control Structure

For purposes of storm management, an orifice, a simple weir, or a combination of the two are the most reliable flow control devices. The theoretical flow characteristics for these devices are as follows:

Circular orifice (submerged discharge)

$$Q = C * A * \sqrt{2gh}$$

Q = orifice discharge in cfs

C = coefficient of discharge

A = orifice cross-sectional area in ft^2.

g = gravitational acceleration constant = 32.2 ft/sec^2

h = height of water surface over center of orifice

Note: When the storage water surface falls below the top of the orifice opening, the flow characteristics are approximately equivalent to those of a weir.

Weir Discharge

$$Q = C * L * H^{3/2}$$

Q = weir discharge in cfs

C = weir coefficient of discharge

L = length of weir in feet

H = hydraulic head above weir crest in feet

Values for the constants to be used in the above equations for different configurations of weir may be found in Exhibit 11.

Other types of flow control devices will require variations of the above equations.

Multistage outlet control structures are possible by including both the orifice and weir in one structure. A common configuration used in detention structures is a pipe orifice as a primary discharge near the bottom of a reservoir with another orifice or simple weir located a few feet above the orifice or near the top of the structure as a secondary discharge. When both control devices are used together, the resulting discharge is the sum of the individual discharges for a given storage elevation.

Elevation - Storage Curve

The elevation-storage curve is the amount of storage in a proposed detention basin at any given elevation. Therefore, before this curve can be developed, a preliminary detention basin must be designed. A rough grading plan showing the basin is helpful. As the design of the basin is changed and finalized, the grading plan should be completed, and this curve must be modified to reflect the final design.

Elevation - Discharge Curve

The elevation discharge curve is the amount of calculated discharge from the proposed basin, through the proposed outlet structure, at any given elevation. Therefore, before this curve can be developed, a preliminary outlet control structure must be designed. As the design of the outlet structure is modified, this curve must be modified. The following section will provide criteria for the design of the outlet control structure.

Storage-Indication Calculations

For sufficiently small time intervals, (dT) the continuity equation can be expressed:

$$\frac{I_1 + I_2}{2} - \frac{O_1 + O_2}{2} = \frac{S_2 - S_1}{dT} \qquad \text{(A)}$$

Subscripts "1" and "2" represent the beginning and end of the time interval. Usually, the complete inflow hydrograph is known or can be determined, as well as the initial storage and outflow values. Therefore, the remaining unknown values are the outflow at the end of the time interval (O2) and the storage volume (S2). The above equation is rearranged as follows:

$$\frac{I_1 + I_2}{2} + \frac{S_1}{dT} - \frac{O_1}{2} = \frac{S_2}{dT} + \frac{O_2}{2} \qquad \text{(B)}$$

The left side of this equation can be determined for successive increments of time, and therefore, the right side of the equation can be quantified. Storage-indication curves are developed to determine outflow (O2) for know values of (S2/dT + O2/2).

The general procedure for flow routing by the Storage Indication Method is as follows:

1. Develop the inflow hydrograph. Hydrographs can be developed using the TR-55 Tabular Hydrograph Method or other approved method.

2. Estimate storage requirements, make a preliminary design of a storage facility and develop an elevation-storage curve for the storage site. Data may be obtained from field survey and topographic maps. The graphical flow routing method is helpful in preliminary design of the storage facility.

3. Develop an elevation-discharge curve for the outlet control structure. This is based on the hydraulic characteristics of the flow control device. The size of the flow control device is based on the design discharge rate and the design high water level.

4. Select the time interval (dT). The value of (dT) may need to be decreased if the storage-indication curve developed in the following step exceeds the equal value line represented by

$$O_2 = \frac{S_2}{dT} + \frac{O_2}{2} \qquad \text{(C)}$$

5. Develop the storage-indication curve by plotting O2 versus (S2/dT + O2/2).

   Check the choice of (dT) as explained in the preceding step. The suggested format for storage-indication computation and operation tables is included to facilitate calculations of this and subsequent steps.

6. Tabulate inflow values for each routing interval (dT) from the design inflow hydrograph, and calculate the average inflow (lavg) by averaging successive values.

$$I_{AVG} = \frac{I_1 + I_2}{2} \qquad \text{(D)}$$

7. Perform the routing by using the operations table and the storage indication curve.

$$\frac{S_1}{dT} - \frac{O_1}{2} = \frac{S_1}{dT} + \frac{O_1}{2} - O_1 \qquad \text{(E)}$$

   The sum of the values from equations (D) and (E) above for each time interval (dT) quantifies the right side of equation (B).

   When inflow equals zero, all values across the operations table are zero. From this point on, average inflow I is determined from Step 6, and values for Si/dT + O1/2 and O1 are taken from preceding values of S2/dT + O2/2 and O2 of the preceding routing interval.

   Referring to the operations table, the value of S2/dT + O2/2 is obtained summing columns five and six and subtracting column seven. The outflow value (O2) is determined using the developed storage-indication curve (Step 5)

8. Develop the outflow hydrograph by plotting O2 versus time from the operations table.

Storm Sewers

Introduction

Storm sewer systems are designed to collect and convey storm runoff from street inlets, from runoff control structures, and from other locations where the accumulation of storm water is undesirable. Storm sewers are closed conduits which convey storm runoff from a drainage area to an outlet. Although the storm sewer is the basic part of the primary storm drainage system, it also serves to carry a significant portion of the runoff during the infrequent major storms.

The objective of a storm sewer system is to remove runoff from an area fast enough to avoid unacceptable amounts of ponding damage and inconvenience. Therefore, design criteria and general design procedures are presented herein to meet these objectives.

Design Criteria

Storm sewers shall be designed to meet the physical requirements stated in the Design Storm Criteria of the Subdivision regulations. In addition, the following specific design criteria are presented to guide the engineering design of storm sewers.

1. Depth - The depth of the storm sewer shall be sufficient to receive water from street inlets and other drainage structures. The minimum cover for storm sewers crossing streets with curb and gutter shall be one foot (clearance) from the bottom of the curb or underdrain to the top of conduit. A minimum cover of two feet from finished ground surface is recommended at all other locations.

2. Velocity - A minimum velocity of two feet per second (fps) is recommended to insure self-cleaning. The maximum allowable velocity shall be 12 fps unless special materials are included for protection against scouring.

3. Design Discharge Method - The Rational, SCS TR-55 Peak Discharge, or other acceptable methodsmaybe used to determine peak discharge.

4. Hydraulic Design - The hydraulic design of storm sewers shall be based on the Manning Equation; The hydraulic grade line for both the primary and major design storms shall be considered.

5. Roughness Coefficients - Exhibit 11 lists the range of Manning roughness coefficients (n) to be used for different conduit materials.

6. Manhole Spacing - Manholes should be located at junctions of conduits, at changes in conduit direction, and at changes in slope. Maximum spacing in storm sewers is 350 feet to facilitate maintenance activities.

7. Hydraulics at Structures - Conduits at structures should be aligned crown to crown when possible. A maximum vertical separation of 24 inches may be allowed if deemed applicable. Invert elevations shall be given to the center of the structure.

The maximum turn for storm shall be 90 degrees. The invert of the structure shall be filled with concrete to the spring line of the conduit to form a smooth radius. The structure shall be sized such that a radius of 2 x DIA of the smaller conduit can be formed within the structure. The minimum interior dimension for any structure shall be two feet.

Where pipe diameters and/or the angle of entry inhibit the structural integrity of square or rectangular structures (i.e. entry at the corner), a circular manhole shall be specified. Box-outs in precast structures shall be properly sized to compensate for the slope of the pipe, wall thickness, and/or angle of entry.

8. Inlet Spacing - Curb inlets shall be placed immediately upstream of intersections. They shall be placed in the tangent sections as much as possible. Multiple inlets may be required at sags in the pavement and at the end of downhill cul-de-sacs. The maximum spacing of curb inlets along both sides of the pavement shall be 250 feet. Additional inlets shall be located where necessary to meet encroachment criteria stated in Section XXXX.11.

9. Drainageways - Storm in drainageways being diverted to the streets shall be intercepted by catch basins or other inlet structures before reaching the right of way. Additional catch basins or inlet structures shall be located as necessary to drain possible ponding areas between or behind adjacent lots.

Exhibit 9 - Nomograph for Solution of the Manning Formula

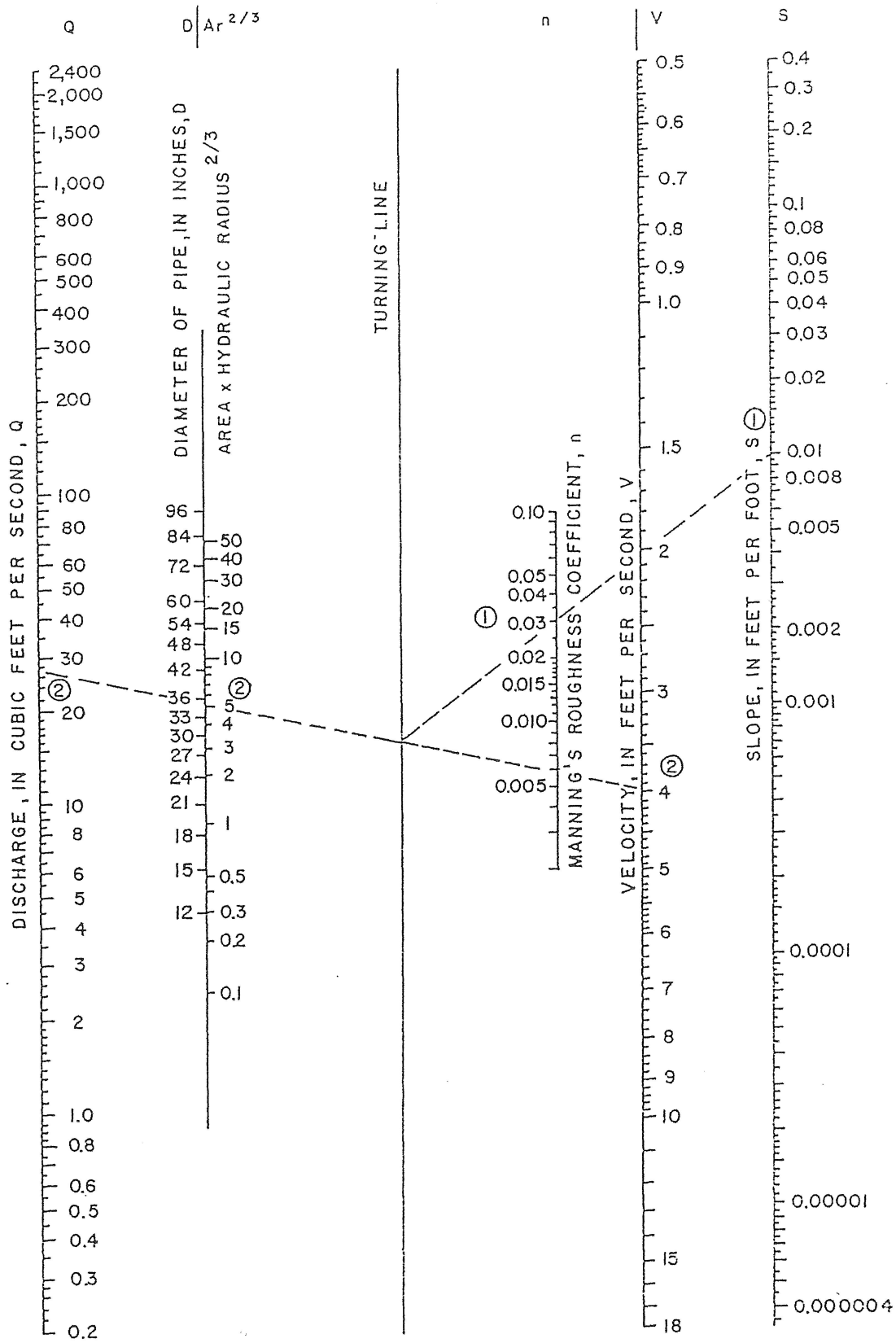

Exhibit 10 - Type II Rainfall for Basin Routing

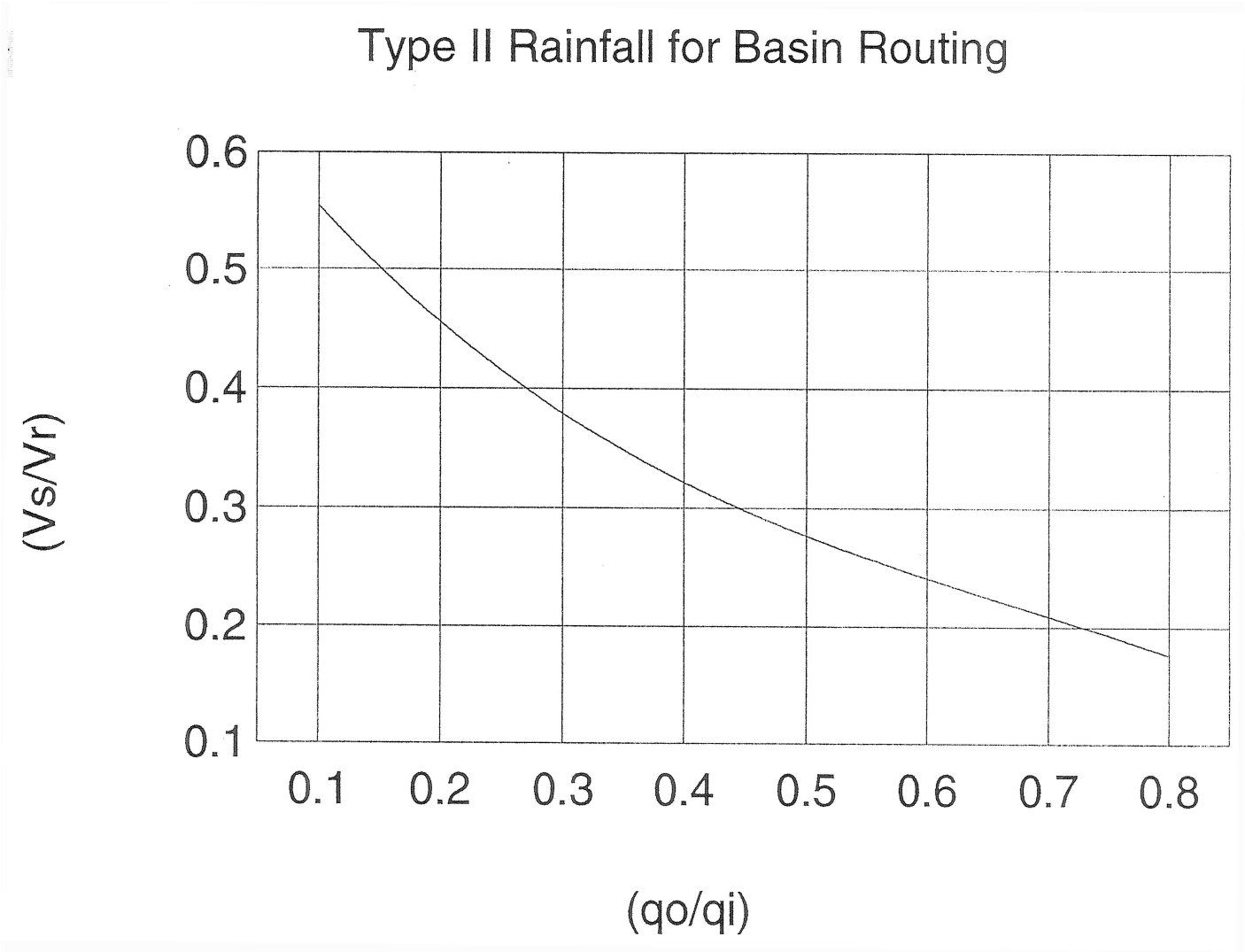

Exhibit 11 – Tables of C Values for Weir and Orifices

Values of C in Q=CLH^1.5 for Broad-Crested Weirs											
Head	Breadth of crest of weir, ft.										
H, ft	0.50	0.75	1.00	1.50	2.00	2.50	3.0	4.0	5.0	10.0	15.0
0.2	2.80	2.75	2.69	2.62	2.54	2.48	2.44	2.38	2.34	2.49	2.68
0.4	2.92	2.80	2.72	2.64	2.61	2.60	2.58	2.54	2.50	2.56	2.70
0.6	3.08	2.89	2.75	2.64	2.61	2.60	2.68	2.69	2.70	2.70	2.70
0.8	3.30	3.04	2.85	2.68	2.60	2.60	2.67	2.68	2.68	2.69	2.64
1.0	3.32	3.14	2.98	2.75	2.66	2.64	2.65	2.67	2.68	2.68	2.63
1.2	3.32	3.20	3.08	2.86	2.70	2.65	2.64	2.67	2.66	2.69	2.64
1.4	3.32	3.26	3.20	2.92	2.77	2.68	2.64	2.65	2.65	2.67	2.64
1.6	3.32	3.29	3.28	3.07	2.89	2.75	2.68	2.66	2.65	2.64	2.63
1.8	3.32	3.32	3.31	3.07	2.88	2.74	2.68	2.66	2.65	2.64	2.63
2.0	3.32	3.31	3.30	3.03	2.85	2.76	2.72	2.68	2.65	2.64	2.63
2.5	3.32	3.32	3.31	3.28	3.07	2.89	2.81	2.72	2.67	2.64	2.63
3.0	3.32	3.32	3.32	3.32	3.20	3.05	2.92	2.73	2.66	2.64	2.63
3.5	3.32	3.32	3.32	3.32	3.32	3.19	2.97	2.76	2.68	2.64	2.63
4.0	3.32	3.32	3.32	3.32	3.32	3.32	3.07	2.79	2.70	2.64	2.63
4.5	3.32	3.32	3.32	3.32	3.32	3.32	3.32	1.88	2.74	2.64	2.63
5.0	3.32	3.32	3.32	3.32	3.32	3.32	3.32	3.07	2.79	2.64	2.63
5.5	3.32	3.32	3.32	3.32	3.32	3.32	3.32	3.32	2.88	2.64	2.63

Hamilton Smith, Jr., "Hydraulics," 1886

Smith's Coefficients of Discharge for Circular and Square Orifices with Full Contraction								
Diameter of Circular Orifices (feet)				Head (feet)	Side of Square Orifices (feet)			
0.02	0.04	0.10	1.00		0.02	0.04	0.10	1.00
	0.64	0.62		0.4		0.64	0.62	
0.66	0.63	0.61		0.6	0.66	0.64	0.62	
0.65	0.63	0.61	0.59	0.8	0.65	0.63	0.62	0.60
0.64	0.62	0.61	0.59	1.0	0.65	0.63	0.61	0.60
0.64	0.62	0.61	0.59	1.5	0.64	0.62	0.61	0.60
0.63	0.61	0.60	0.60	2.0	0.64	0.62	0.61	0.60
0.63	0.61	0.60	0.60	2.5	0.63	0.62	0.61	0.60
0.63	0.61	0.60	0.60	3.0	0.63	0.62	0.61	0.60
0.62	0.61	0.60	0.60	4.0	0.63	0.61	0.61	0.60
0.62	0.61	0.60	0.60	6.0	0.62	0.61	0.61	0.60
0.61	0.61	0.60	0.60	8.0	0.62	0.61	0.61	0.60
0.61	0.60	0.60	0.60	10	0.62	0.61	0.60	0.60
0.60	0.60	0.60	0.59	20	0.61	0.60	0.60	0.60
0.60	0.60	0.59	0.59	50	0.60	0.60	0.60	0.60
0.59	0.59	0.59	0.59	100	0.60	0.60	0.60	0.60

Exhibit 12 – Storage – Indication Computation Table

STORAGE - INDICATION COMPUTATION TABLE

(1) Elevation (ft)	(2) Discharge O2 (cfs)	(3) Storage S2 (cfs-min)	(4) O2 / 2 (cfs)	dT= minutes (5) S2 / dT (cfs)	(6) S2 / dT + O2 / 2 (cfs)

STORAGE - INDICATION OPERATIONS TABLE

(1) Routing Interval (ea)	(2) Hydrograph Time T (hours)	(3) Time Interval dT T2 - T1 (min)	(4) Inflow I (cfs)	(5) Average Inflow (I1 + I2) / 2 (cfs)	(6) Previous (8) S1 / dT + O1 / 2 (cfs)	(7) Previous (9) O1 (cfs)	(8) (5)+(6)-(7) S2 / dT + O2 / 2 (cfs)	(9) (2) From S-I Curve O2 (cfs)
1		0.0	0.0	0.0	0.0	0.0	0.0	0.0
2					0.0	0.0		
3								
4								
5								
6								
7								
8								
9								
10								
11								
12								
13								
14								
15								
16								

Exhibit 14 – Storm Sewer Design Chart

STORM SEWER DESIGN CHART

PROJECT NAME: **TYPE OF PIPE:**

DESIGN FREQUENCY= YEAR N= DATE DESIGNER

FROM MH	TO MH	DRAINAGE AREA dA	DRAINAGE AREA SUM A	TIME (MIN.) dT	TIME (MIN.) SUM T	INTENSITY "I"	RUNOFF COEF.	CHANGE CA	SUM CA	DISCHARGE "Q"	LENGTH OF PIPE	CALC. DIA.	SIZE OF PIPE	SLOPE OF PIPE	FULL "V"	FULL "Q"	REMARKS

$I = a / (t + b)^{m}$

Coef.	Years 1	2	5	10	25	50	100
a	33.102	40.256	50.354	57.72	69.809	82.104	94.153
b	13.490	13.180	13.330	13.120	12.920	13.210	12.990
m	0.820	0.819	0.821	0.819	0.817	0.819	0.818

TR-55/Rational Frequency Structures	Design Yr.	WRM I
Storm Sewers	10 Yr.	4
Culverts	10 Yr.	4
Bridges	50 Yr.	7
Floodplain	100 Yr.	7

Manning's "N" Values Type	Existing	Proposed
SMOOTH INSIDE PLASTIC	0.012	0.011
R.C.P.	0.015	0.013
C.M.P.	0.024	N/A
V.C.P.	0.015	0.013

Bibliography

1. Culvert Design Aids: An Application of U.S. Bureau of Public Roads, Culvert Capacity Chart & Some Important Factors of Culvert Design, Portland Cement Association, 1962.

2. Drainage of Highway Pavements, Hydraulic Engineering Circular No. 12, FHWA - T S -202, Frank L. Johnson and Fred F.M. Chang, March 1984.

3. Handbook of Hydraulics, Fifth Edition, McGraw-Hill Book Company, King &Brater.

4. Hydraulics, Hamilton Smith Jr., 1886

5. Location and Design Manual, Volume Two, Drainage Design, Bureau of Location and Design, Ohio Department of Transportation

XXXX.12ON-GOING INSPECTIONS

The City of Barberton shall inspect or require a third party inspection of storm water management practices periodically. Upon finding a malfunction or other need for maintenance, the City of Barberton shall provide written notification to the responsible party, as detailed in the Inspection and Maintenance Agreement, of the need for maintenance. Upon notification, the responsible party shall have ten (10) working days, or other mutually agreed upon time, to makes repairs or submit a plan with detailed action items and established timelines. Should repairs not be made within this time, or a plan approved by the City of Barberton Engineer for these repairs not be in place, the City of Barberton may undertake the necessary repairs and assess the responsible party.

An Inspection and Maintenance Agreement binding on the owner and all subsequent owners of lands served by the system of storm water management practices designed for the site. Such Agreements shall include all post-construction BMPs, shall be recorded with the deed of the property as follows:

a) The location of each storm water management practice, including those practices permitted to be located in, or within 50 feet of, water resources.

b) The method of funding long-term maintenance and inspections of all storm water management practices.

c) Features of the design that facilitate maintenance of the practice.

d) The on-going procedures needed to assure the continued performance of storm water management practices.

e) Additional standards, as required by the City of Barberton Engineer, to ensure continual performance of storm water management practices permitted to be located in, or within 50 feet of, water resources.

f) The party responsible for long-term maintenance, including repairs and inspections.

g) A prohibition on alteration of the practice without prior written approval from the City of Barberton Engineer.

h) An easement that allows the City of Barberton access to the storm water management practice at reasonable times for inspections to document the condition of the practice and to ensure it is functioning as originally designed and approved.

i) Permission for City of Barberton to enter upon the property and take whatever action is deemed necessary to maintain facilities that do not perform as specified in the Inspection and Maintenance Agreement, and to be reimbursed by the property owner(s) served by the facility for all expenses incurred within 10 days of receipt of invoice from the City of Barberton.

j) A release of the City of Barberton from all damages, accidents, casualties, occurrences, or claims that might arise or be asserted against said parties from the construction, presence, existence, or maintenance of the storm water management practices.

Alteration or termination of these stipulations is prohibited. The applicant must provide a draft of this Inspection and Maintenance Agreement as part of the Comprehensive Storm Water Management Plan submittal. Once a draft is approved, a recorded copy of the Agreement must be submitted to the City of Barberton to receive final inspection approval of the site.

Residential Detention Basin Inspection and Maintenance Agreement

City of Barberton
576 W. Park Ave.
Barberton, OH 44203

RE: Detention Basin

We, the owners of _____ agree to the complete continuous maintenance of the detention basin.

This maintenance agreement shall run with the land and shall be binding on and shall inure to the benefit of the parties hereto, their heirs, executors, administrators, successors, and assigns.

This maintenance work to include:

1.) Cleaning the grate, catch basin, and screen on all structures when they are more than 10% clogged.
2.) Keeping the outlet pipe and/or ditch open.
3.) Keeping the orifice in place and cleaned.
4.) Repair of earthen dike in case of erosion.
5.) Repair and/or replace the structures as necessary.
6.) Removal of debris as necessary.
7.) Maintain a slope on the basin bottom to provide a positive drainage (no low spots).
8.) Surface of dike and detention basin shall be seeded and mowed.
9.) The basin shall be inspected by a professional engineer on an interval not to exceed two years. A copy of the report shall be sent to the City of Barberton Engineering Department.

IN WITNESS WHEREOF, the OWNERS have executed this Maintenance Agreement at Barberton, Ohio on the _____ day of_____, 200__.

Owner Sign: _____

Printed Name: _____

Address: _____

Phone: _____

State of Ohio

County of _____

Before me, a notary public in and for said County and State, personally appeared the above _____ name(s) who acknowledged the making of the foregoing instrument and the signing of this agreement to be his free act and deed.

In testimony whereof I have hereunto set my hand and affixed by official seal at this _____day of_____, 200__.

Notary Public

_____

XXXX.13 FEES

The Comprehensive Storm Water Management Plan review, filing, and inspection fee is part of a complete submittal and is required to be submitted to the City of Barberton before the review process begins. The City of Barberton Engineer shall establish a fee schedule based upon the actual estimated cost for providing these services.

XXXX.14 BOND

If a Storm Water Management Plan is required by this regulation, soil-disturbing activities shall not be permitted until a cash bond of $5,000/acre disturbed, has been deposited with the City of Barberton Finance Department. This bond shall be posted for the City of Barberton to perform the obligations otherwise to be performed by the owner of the development area as stated in this regulation and to allow all work to be performed as needed in the event that the applicant fails to comply with the provisions of this regulation. The stormwater bond will be returned, less City of Barberton administrative fees as detailed in Chapter XXXX of the City of Barberton Codified Ordinances, when the following three criteria are met:

1. After 80% of the lots of the project have been complete or 80% of the total project has been permanently stabilized or two years from the time of permanent stabilization have passed.

2. An As Built Inspection of all water quality practices is conducted by the City of Barberton Engineer.

3. An Inspection and Maintenance Agreement signed by the developer, the contractor, the City of Barberton, and the private owner or homeowners association who will take long term responsibility for these BMPs, is accepted by the City of Barberton Engineer.

XXXX.15 VIOLATIONS

No person shall violate or cause or knowingly permit to be violated any of the provisions of this regulation, or fail to comply with any of such provisions or with any lawful requirements of any public authority made pursuant to this regulation, or knowingly use or cause or permit the use of any lands in violation of this regulation or in violation of any permit granted under this regulation.

XXXX.16 APPEALS

Any person aggrieved by any order, requirement, determination, or any other action or inaction by the City of Barberton in relation to this regulation may appeal to the court of common pleas. Such an appeal shall be made in conformity with [insert appropriate Ohio Revised Code sections]. Written notice of appeal shall be served on the City of Barberton.

XXXX.17 PENALTY

Any person, firm, entity or corporation; including but not limited to, the owner of the property, his agents and assigns, occupant, property manager, and any contractor or subcontractor who violates or fails to comply with any provision of this regulation is guilty of a misdemeanor of the third degree and shall be fined no more than five hundred dollars ($500.00) or imprisoned for no more than sixty (60) days, or both, for each offense. A separate offense shall be deemed committed each day during or on which a violation or noncompliance occurs or continues.

XXXX.18 Construction Details

Detail No. 1a - Standard Manhole Detail

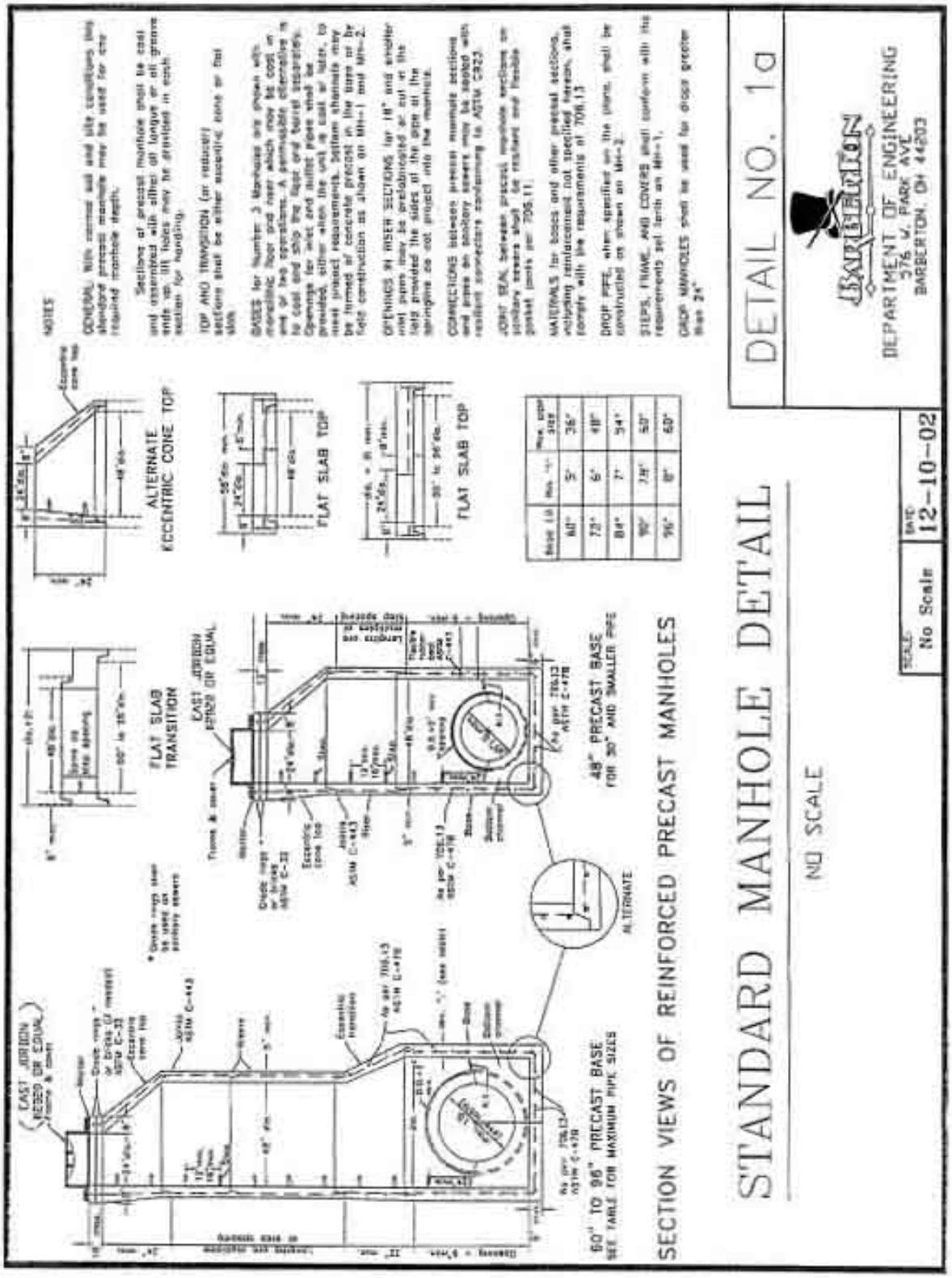

Detail No. 2 – Standard Storm Sewer Manhole

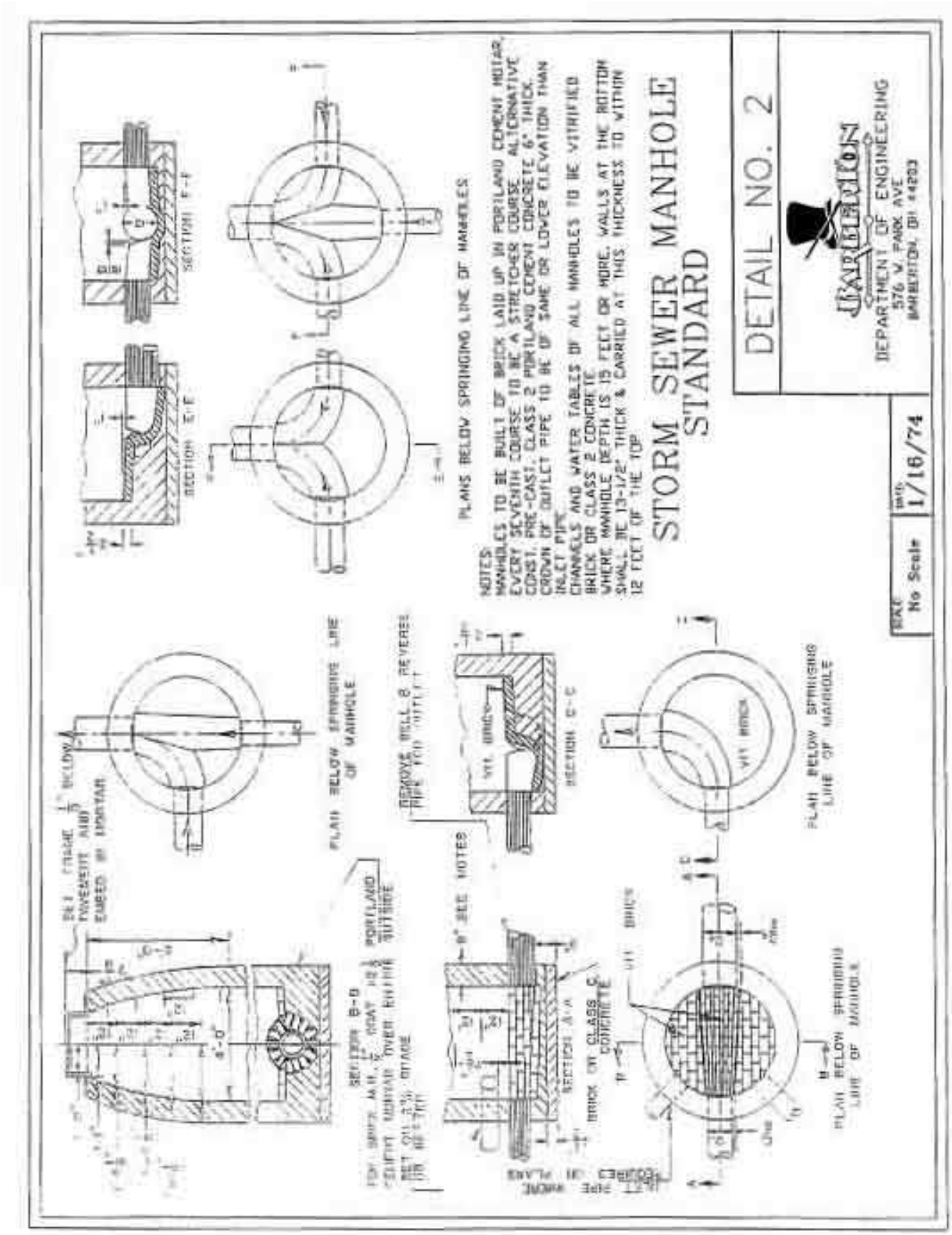

Detail No. 3 – Standard Frame Cover and Step for Manholes

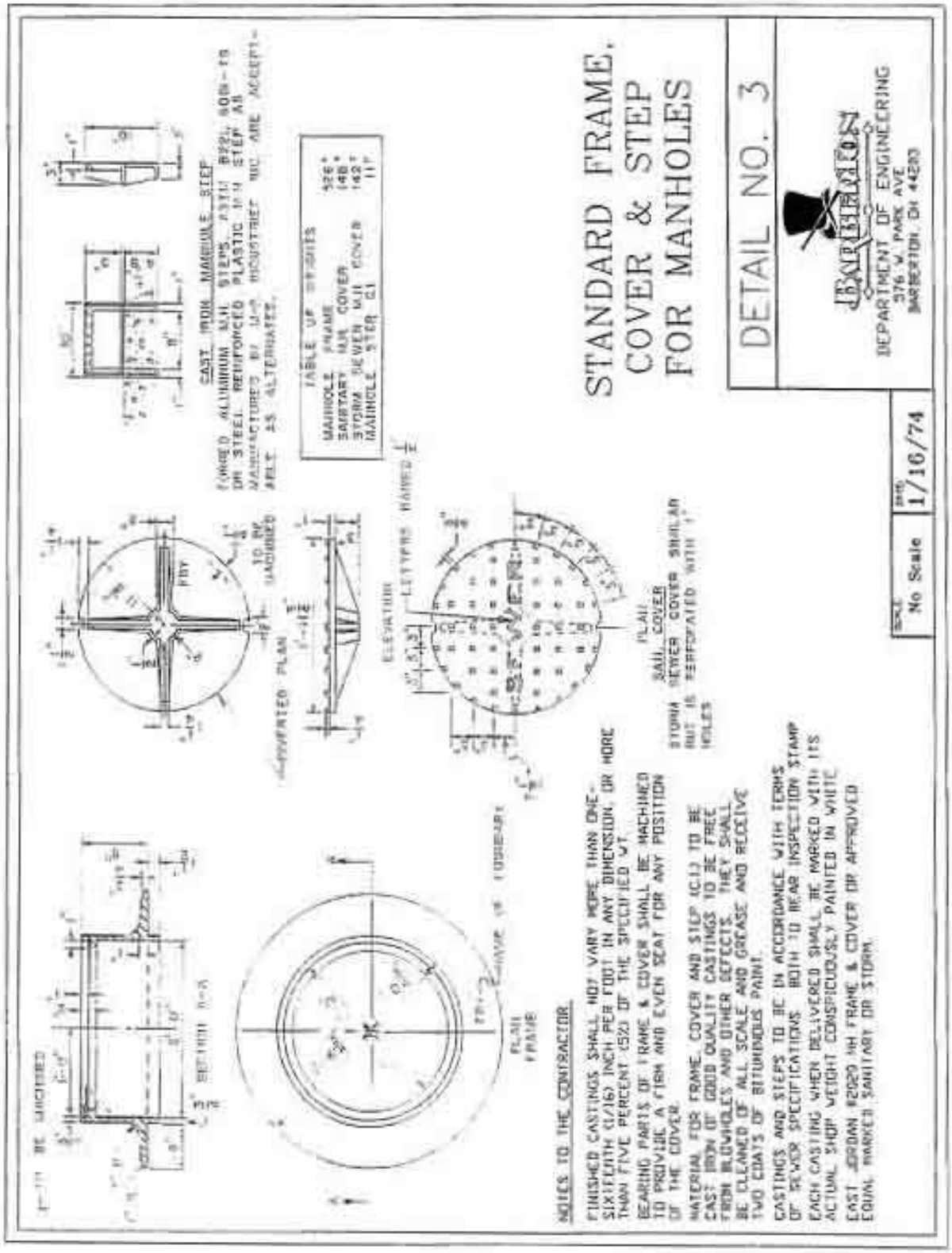

Detail No. 4 – Combination Manhole and Catch Basin

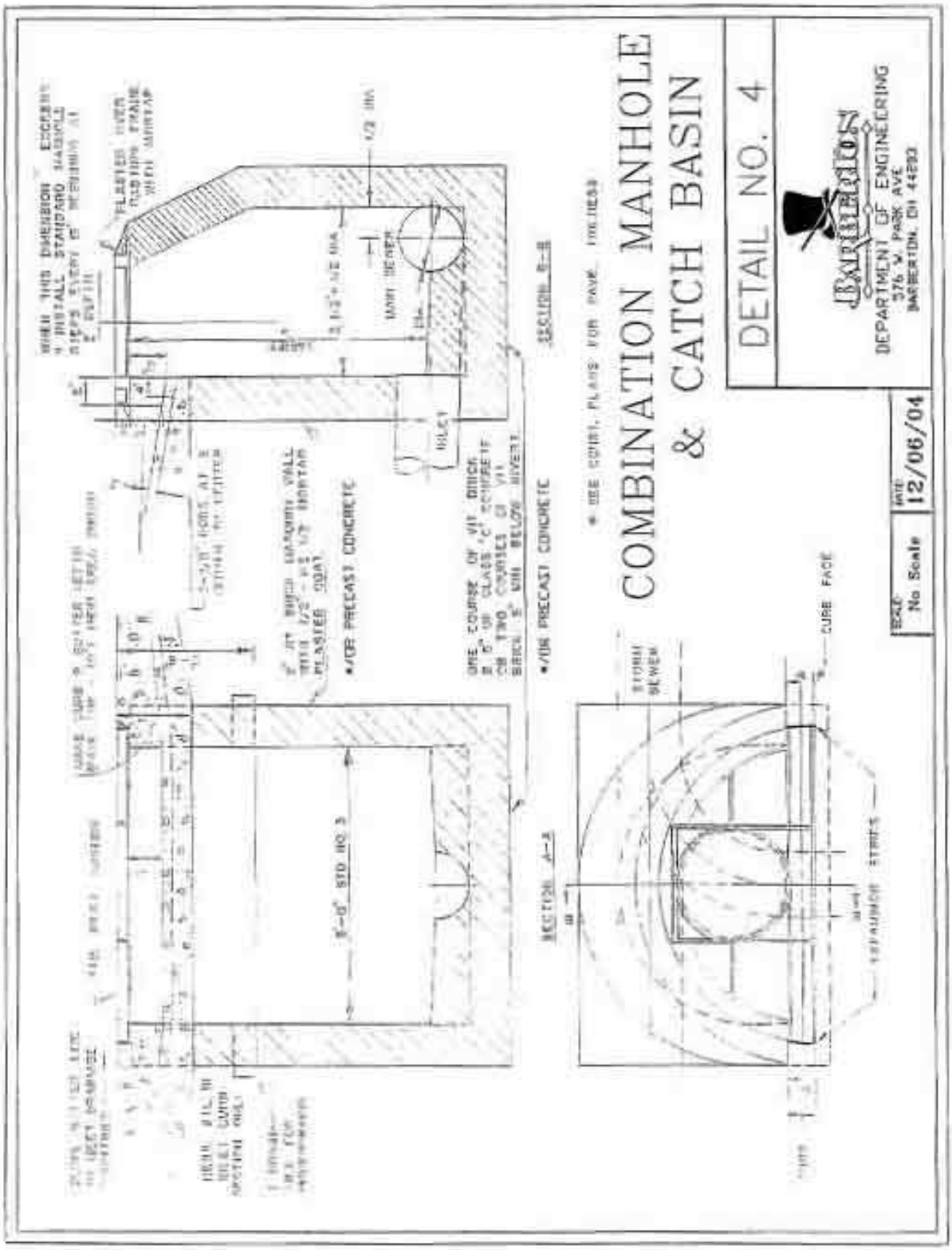

Detail No. 4a – Combination Manhole and Catch Basin with T-Bar

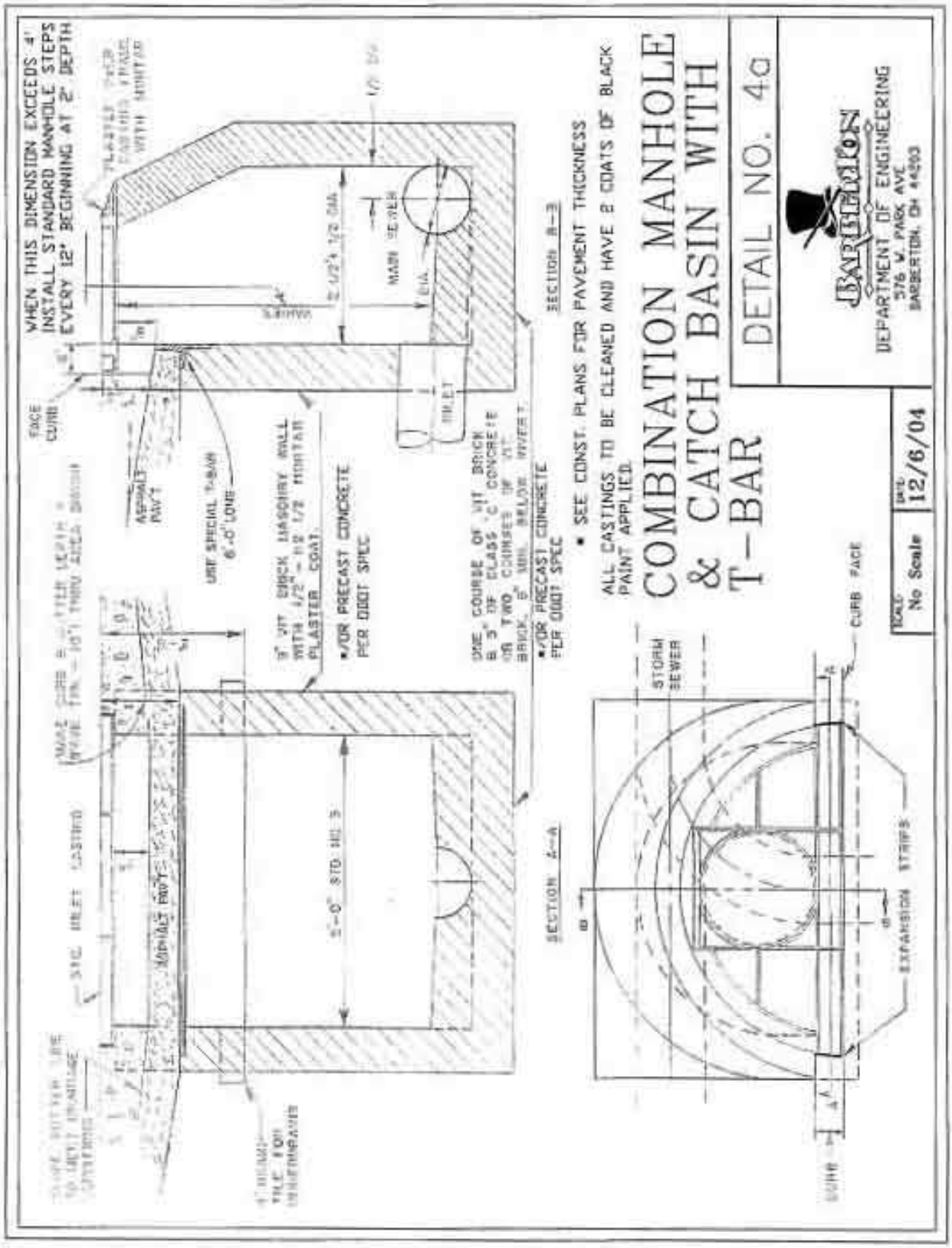

Detail No. 4b – Catch Basin No. 4b

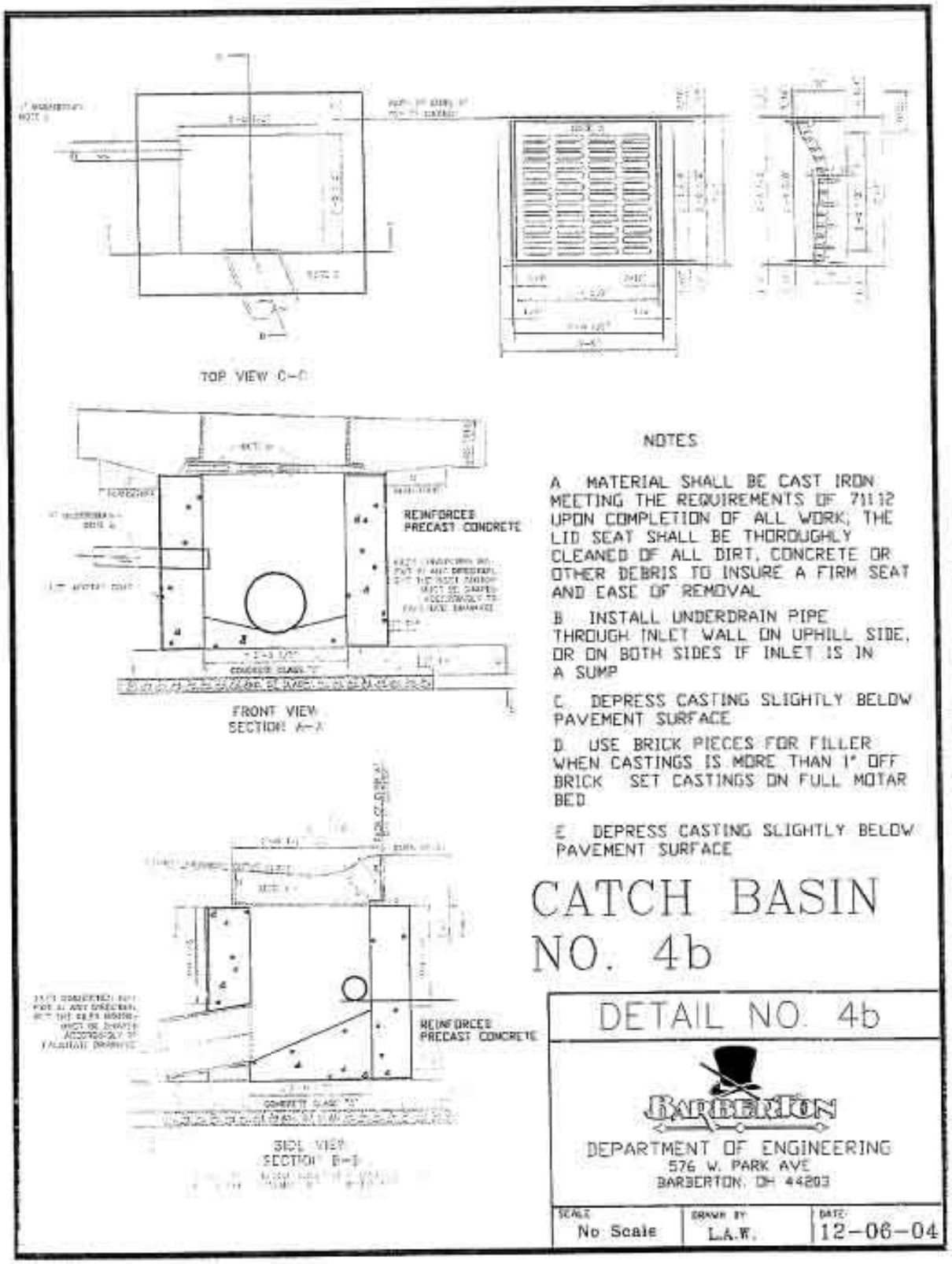

Detail No. 5 – Standard Storm Sewer Catch Basin

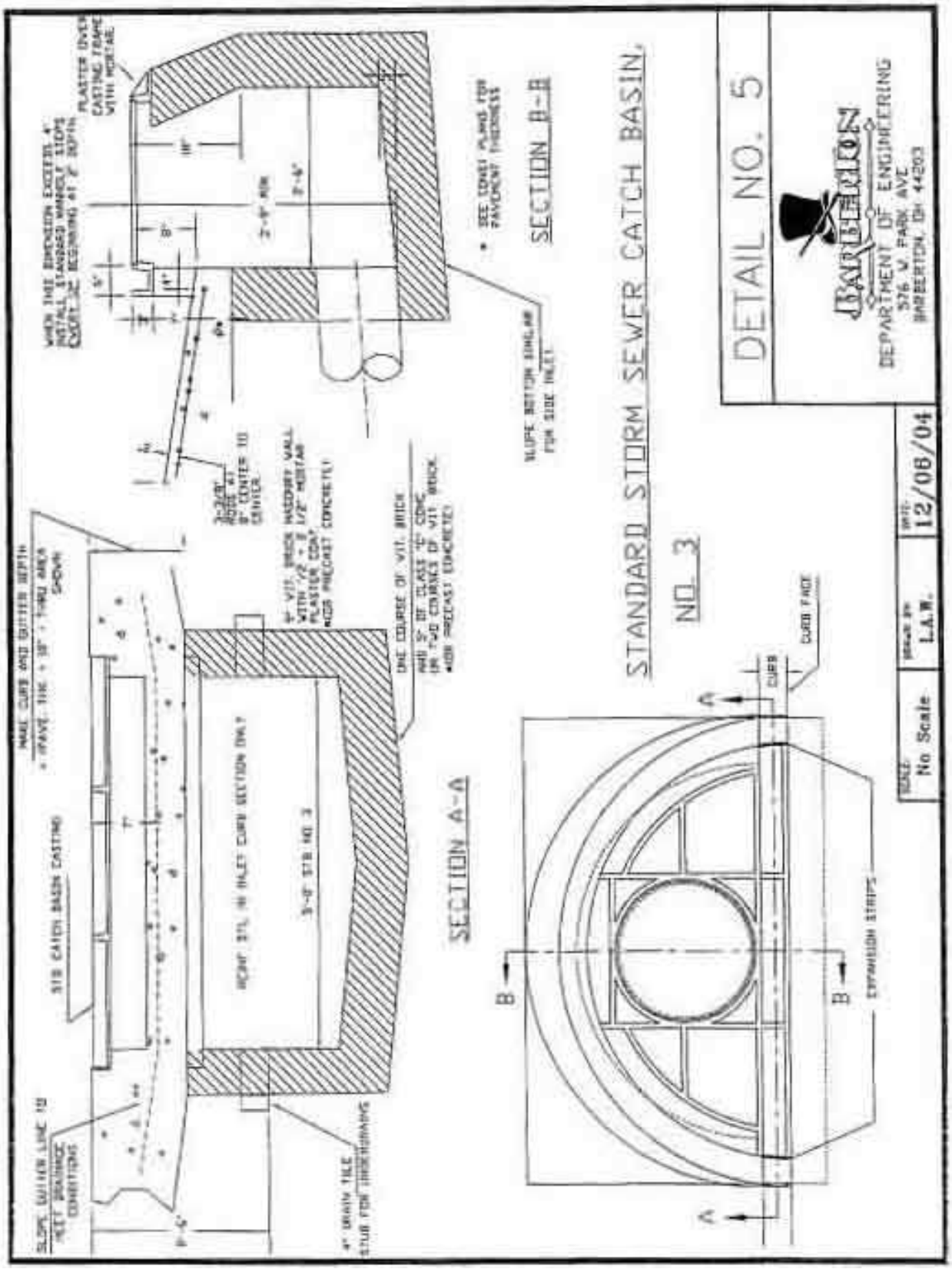

Detail No. 5a – Standard Storm Sewer Catch Basin No. 3 with T-Bar

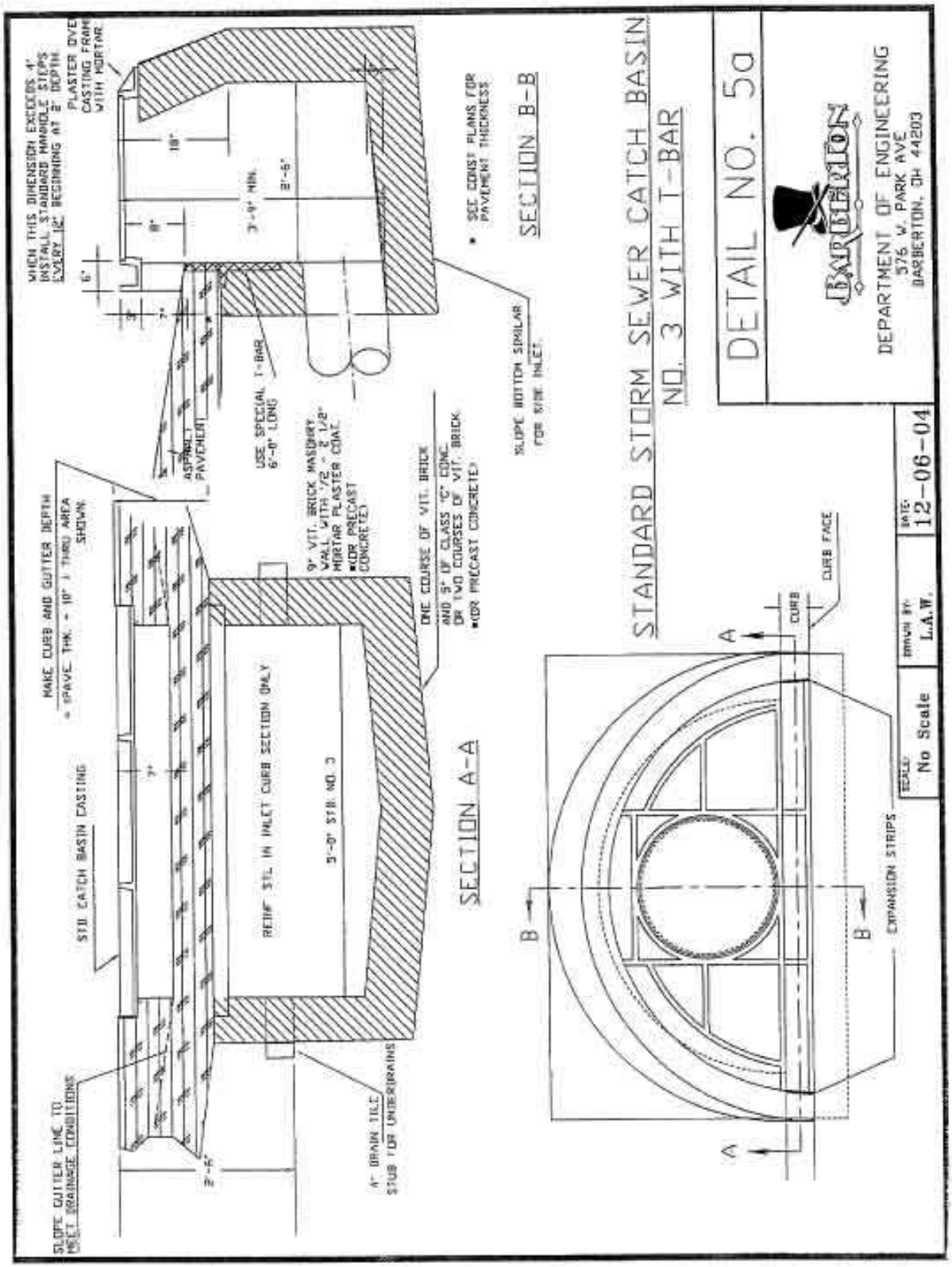

Detail No. 5b – Catch Basin 5b

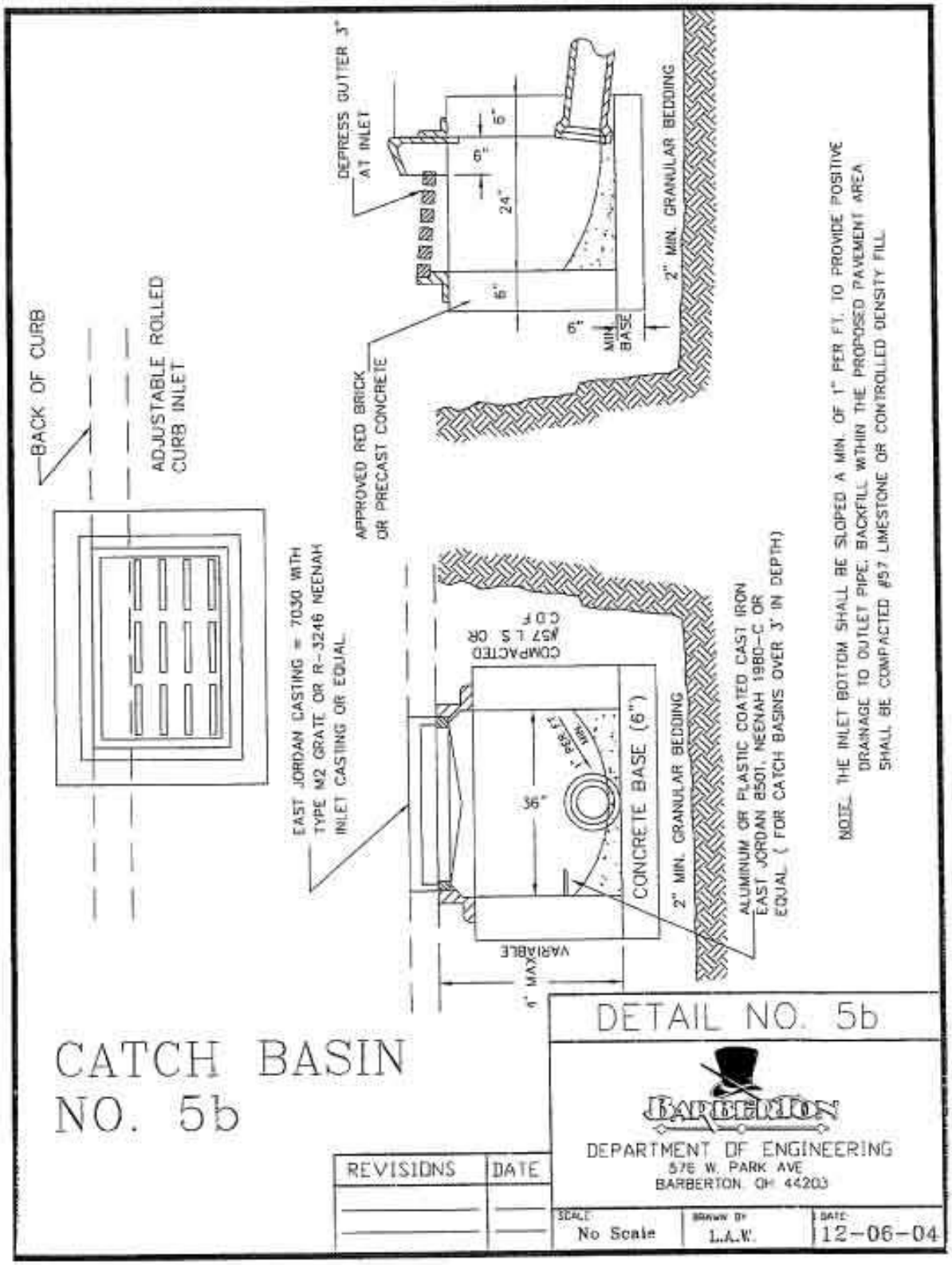

Detail No. 6 – Catch Basin 2-2B

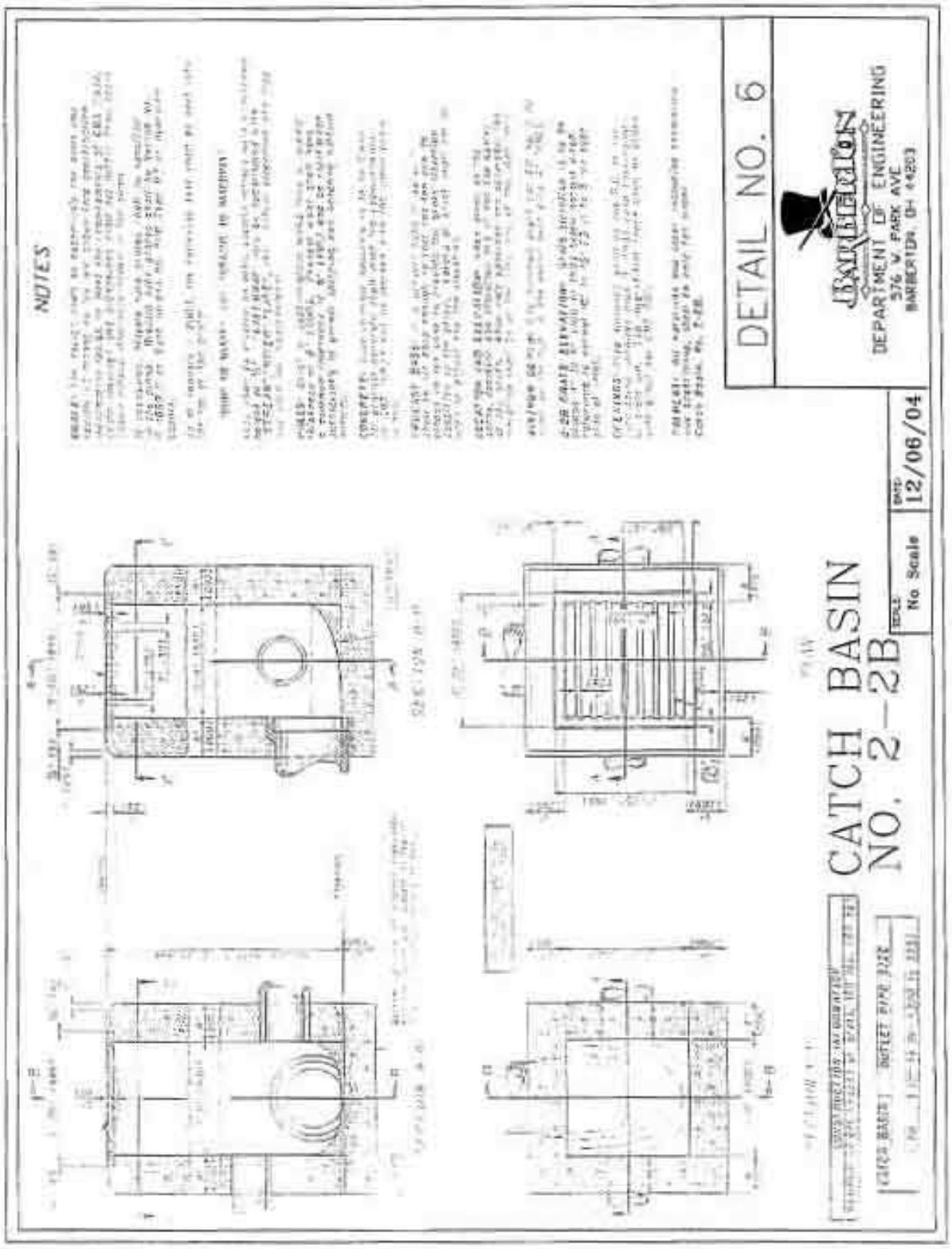

Detail No. 6a – Type D Catch Basin

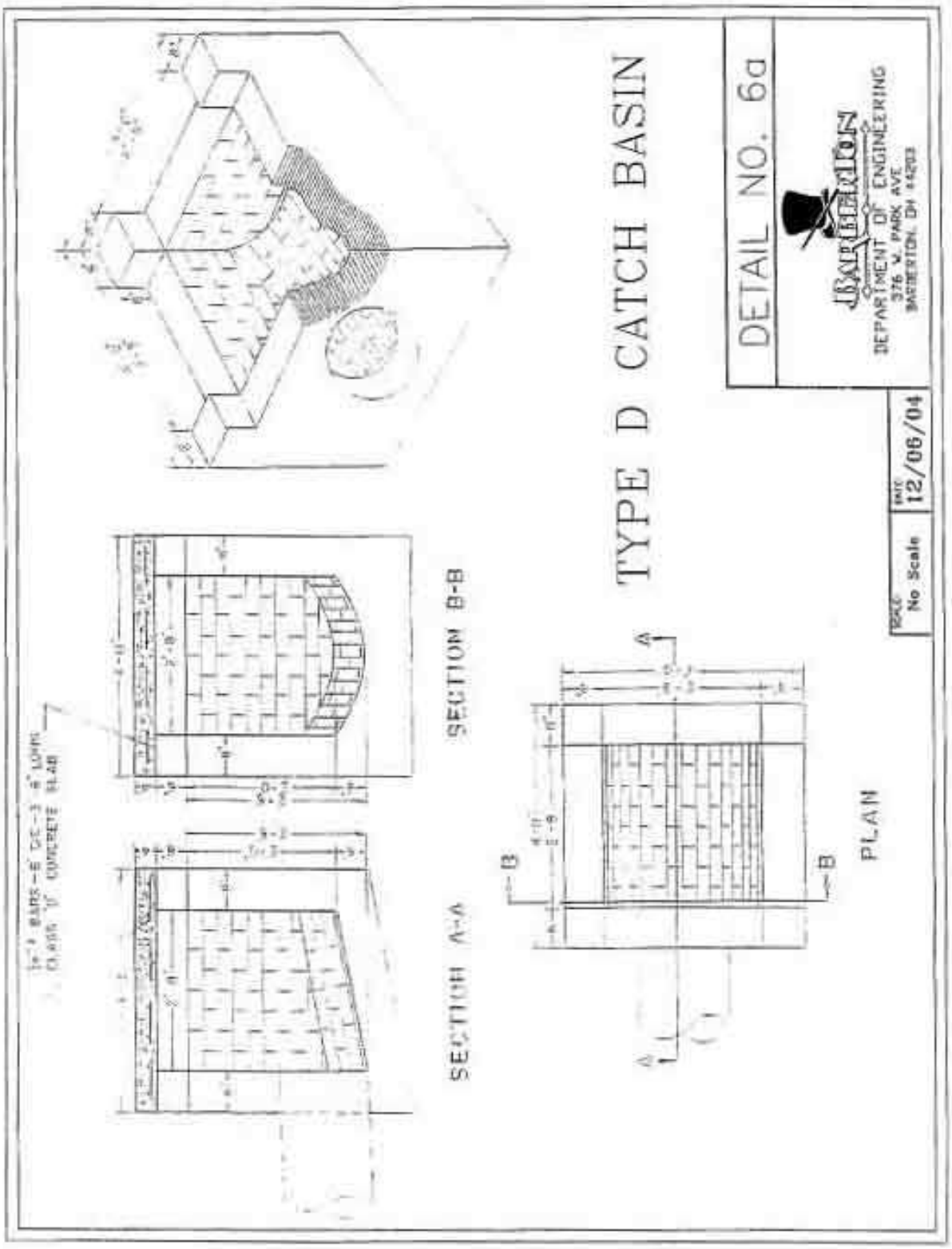

Detail No. 7 Standard Castings No. 3 Inlets

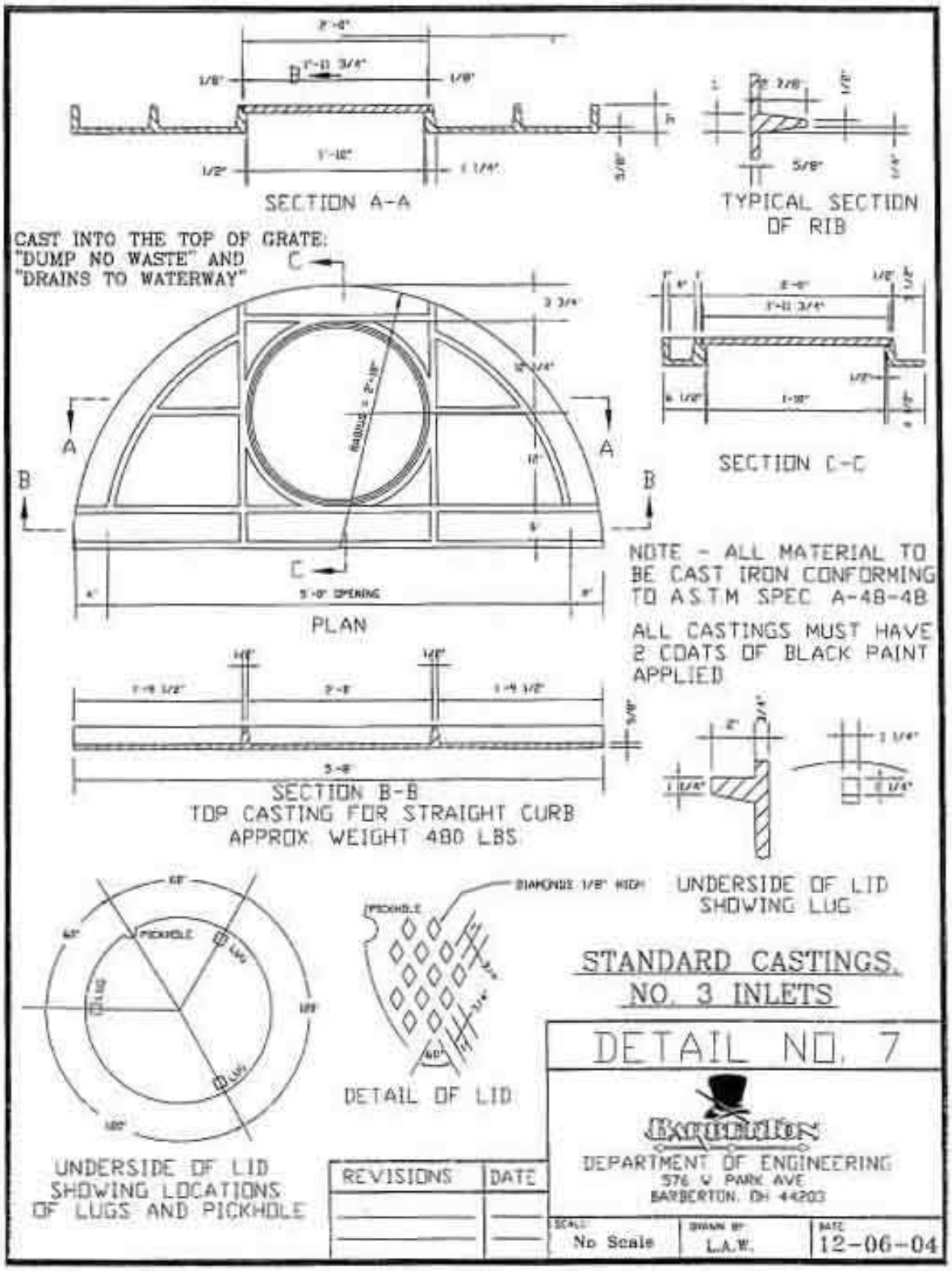

Detail No. 14 – Asphalt Permanent Pavement Restoration

ASPHALT PERMANENT PAVEMENT RESTORATION

Description

(a) This item shall consist of furnishing and installing a 9" Class "C" concrete base on the compacted trench refill and installing thereon hot mix asphaltic concrete top in accordance with the detail for pavement restoration as shown below on the Permanent Restoration Detail.

Material

(a) The concrete used shall meet the requirements of the State of Ohio Highways specification for Class "C" concrete.

(b) The asphaltic concrete shall meet the requirements of the State of Ohio Highway specification Item 448, Type I, Asphalt Concrete Surface Course.

(c) Sections replaced shall be sealed with pure asphalt cement 1/8" thick and extending 6" each way beyond the joint.

Method of Construction

(a) Permittee or contractor shall note that the replacement area shall extend beyond the edge of excavation by one (1) foot on each side of the trench as indicated in the detail. Such backfill material shall be rammed and tamped using mechanical or pneumatic tampers.

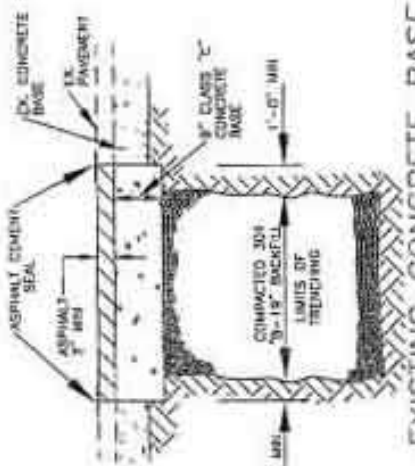

Detail No. 14a – Concrete Pavement Restoration

CONCRETE PAVEMENT RESTORATION

Description

(a) This item shall consist of furnishing and installing a 7" Class "C" concrete pavement on the compacted trench backfill in accordance with the detail for pavement restoration as shown below on the Concrete Restoration Detail

Material

(a) The concrete used shall meet the requirements of the State of Ohio Highways specification for Class "C" concrete.

(b) The concrete pavement shall meet the requirements of the State of Ohio Highway specification "452" Plain Portland Cement Concrete Pavement.

(c) Sections replaced shall be sealed with joint filler conforming to specifications 705.04 or 705.11

(d) 5/8" Dowels shall be placed at 30" Max spacing if directed by the Engineer.

Method of Construction

(a) Permittee or contractor shall note that the replacement area shall extend beyond the edge of excavation by one (1) foot on each side of the trench as indicated on the detail. Such backfill material shall be rammed and tamped using mechanical or pneumatic tampers.
Concrete Pavement Replacement shall be extended to the nearest joint or directed by the City Engineer.

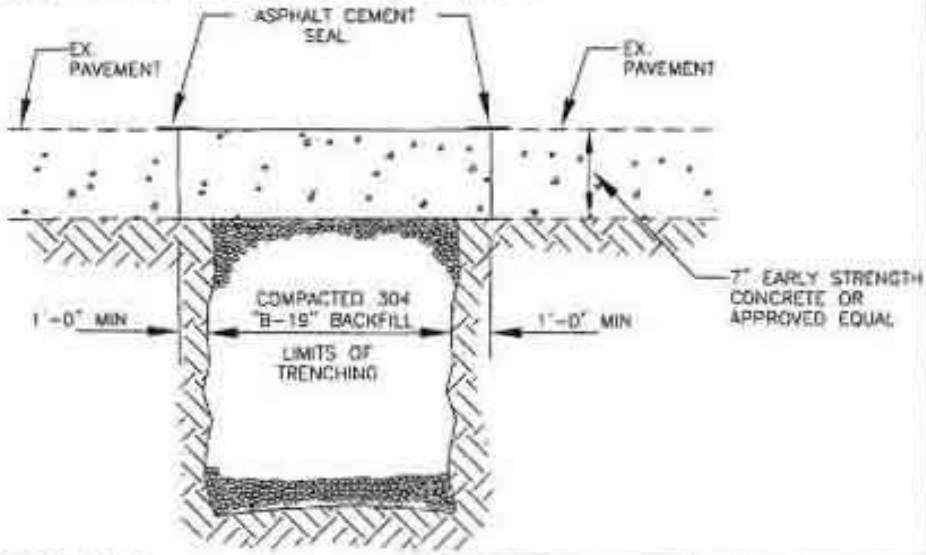

CONCRETE PAVEMENT RESTORATION

DETAIL NO. 14a

BARBERTON
DEPARTMENT OF ENGINEERING
576 W. PARK AVE
BARBERTON, OH 44203

REVISIONS	DATE

SCALE	DRAWN BY	DATE
No Scale	L.A.W.	12-06-04

Detail No. 29 – Typical – Sewer Pipe Encasement

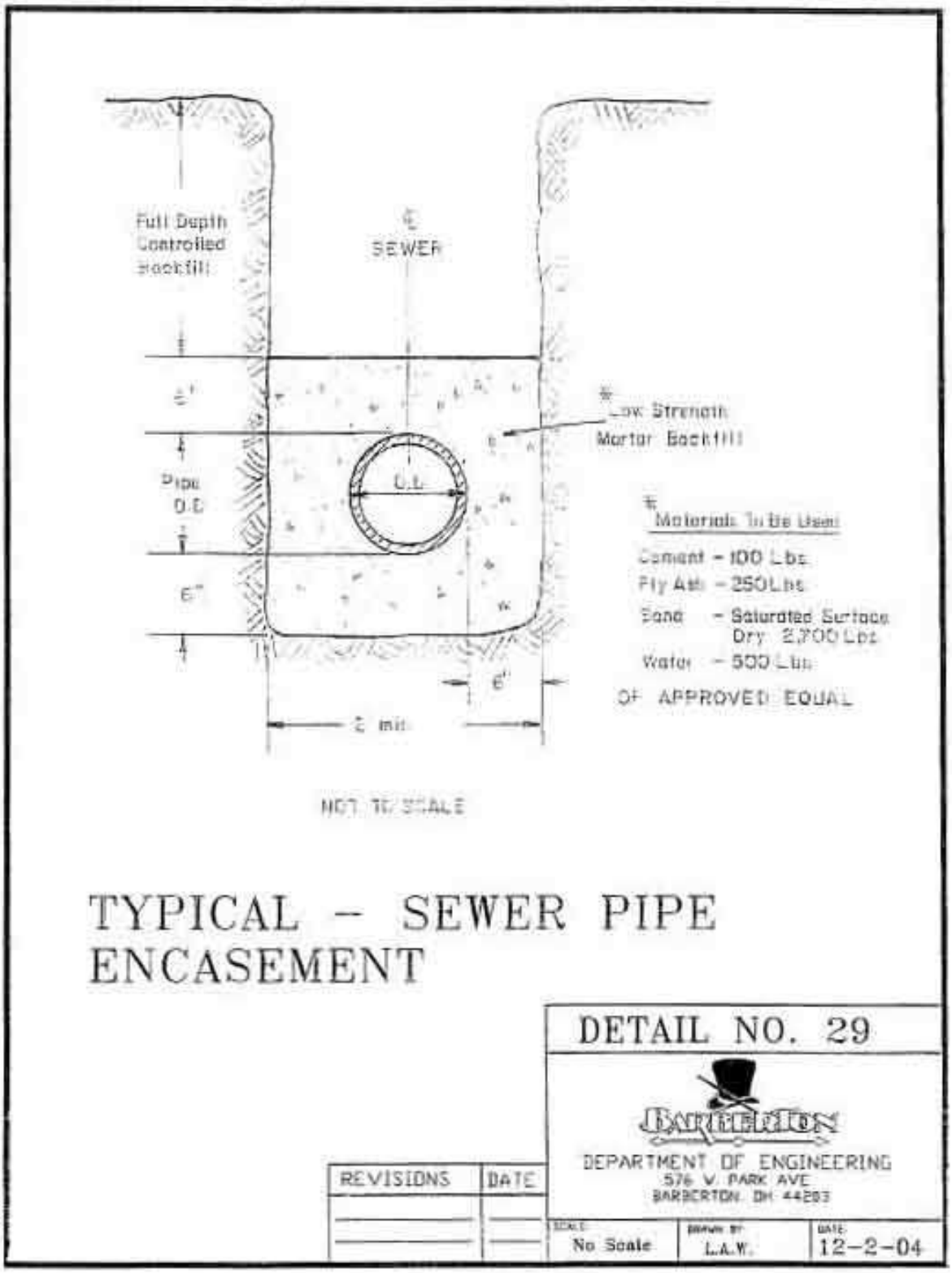

Detail No. 32 – Typical Y-Branch Installation or Sewer Reconstruction Repair Method

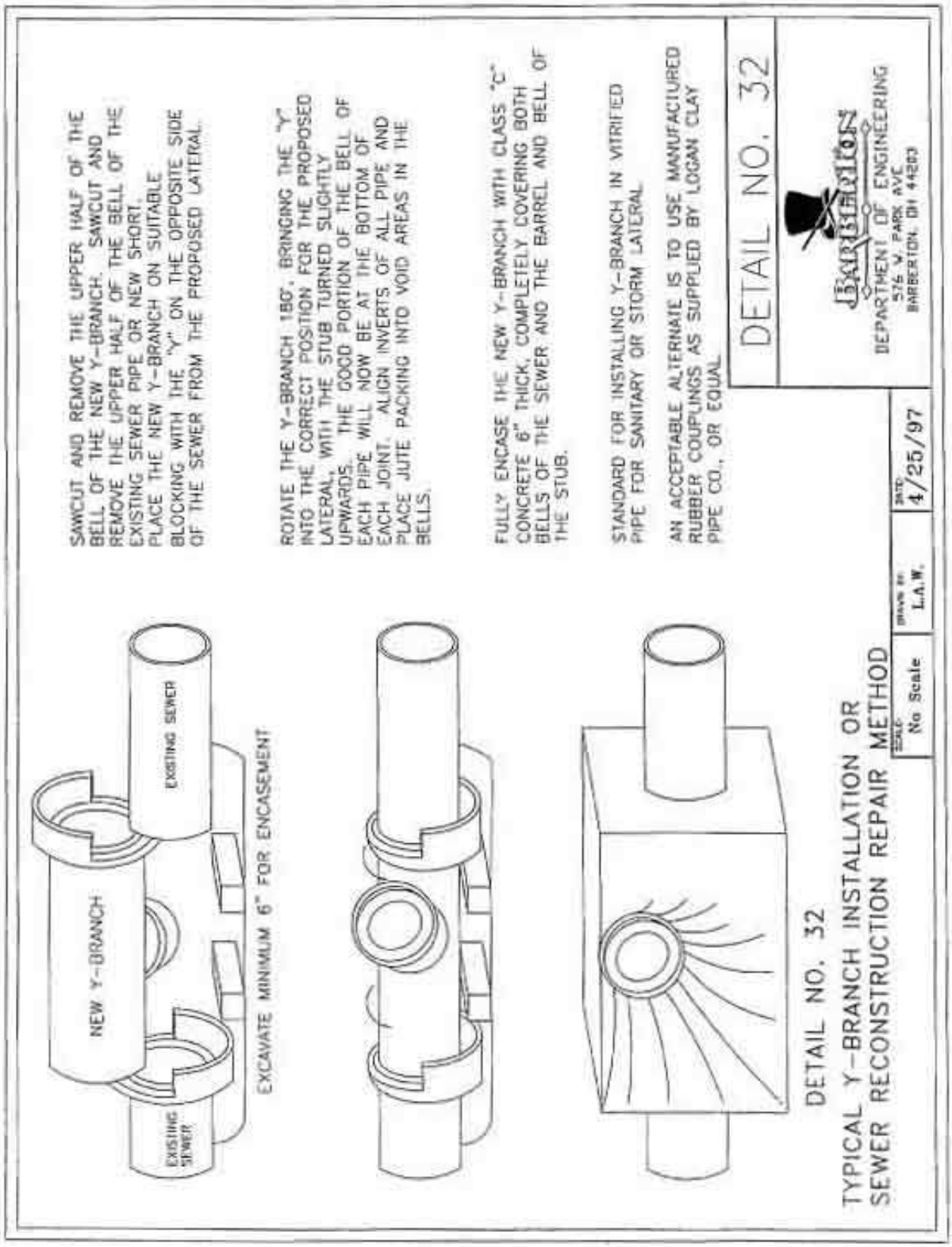

Detail No. 32a – Typical Y-Branch Installation or Sewer Reconstruction Repair Method

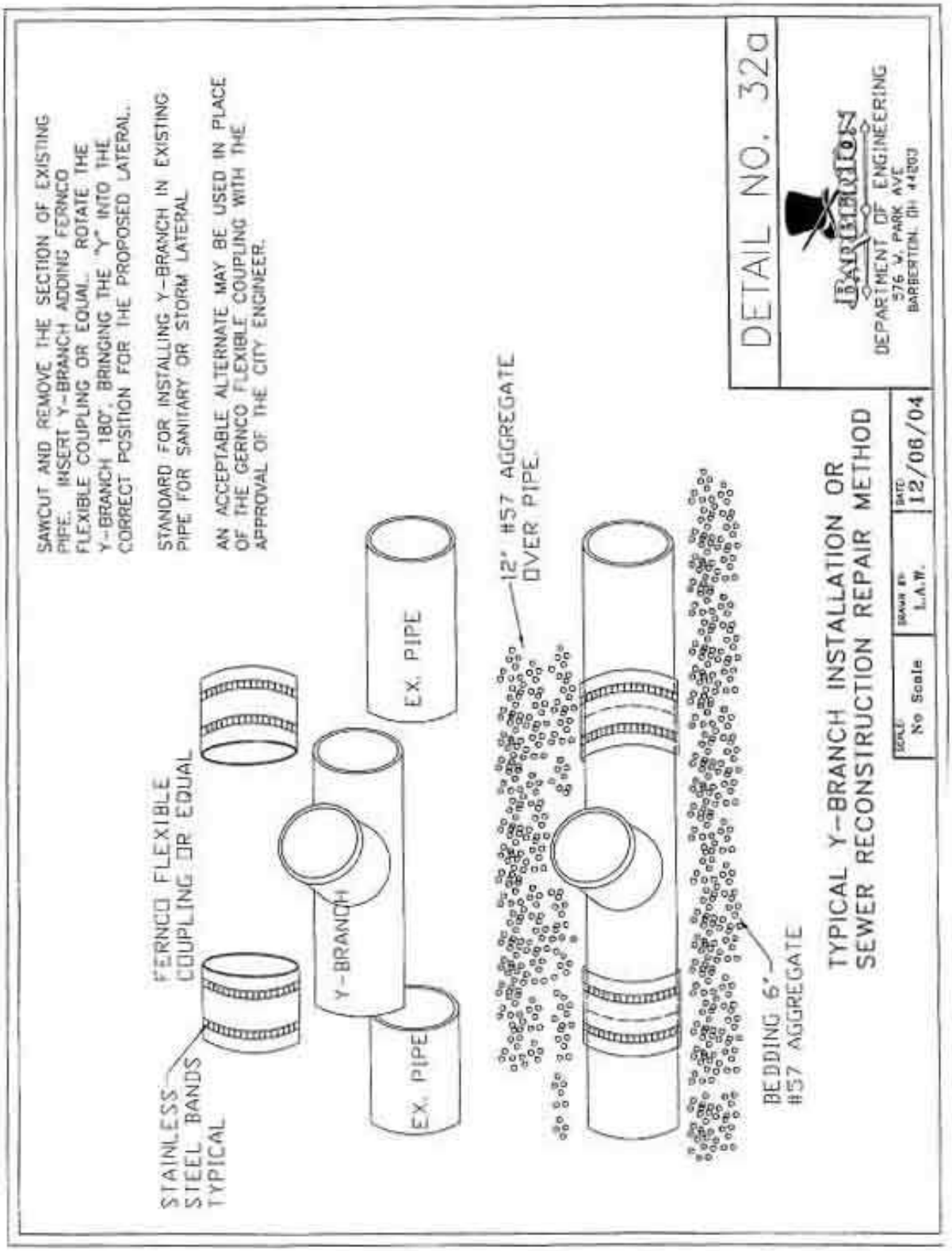

Detail No. 33 – Sewer Pipe Installation

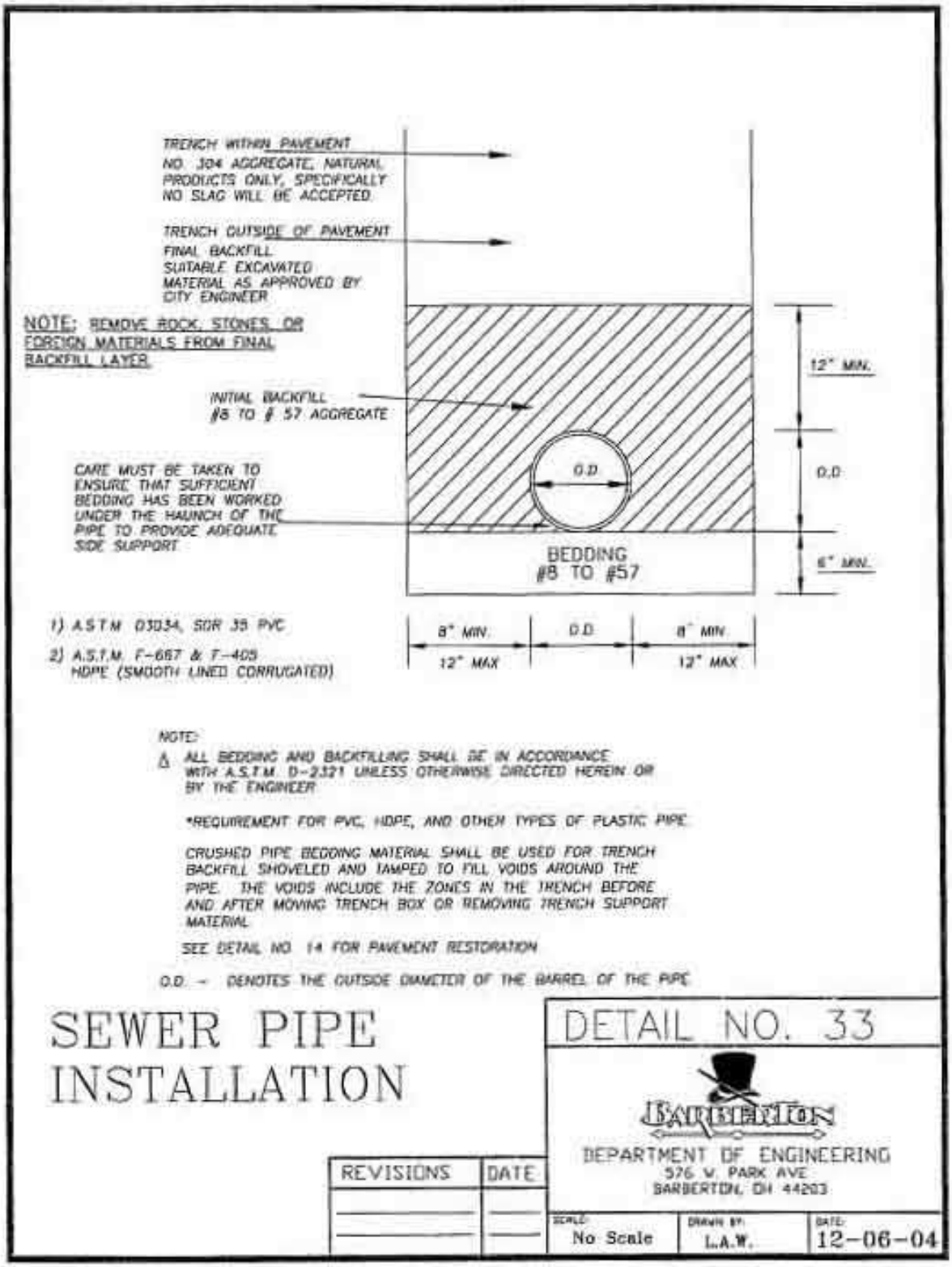

Detail No. 34 – Rigid Pipe Installation

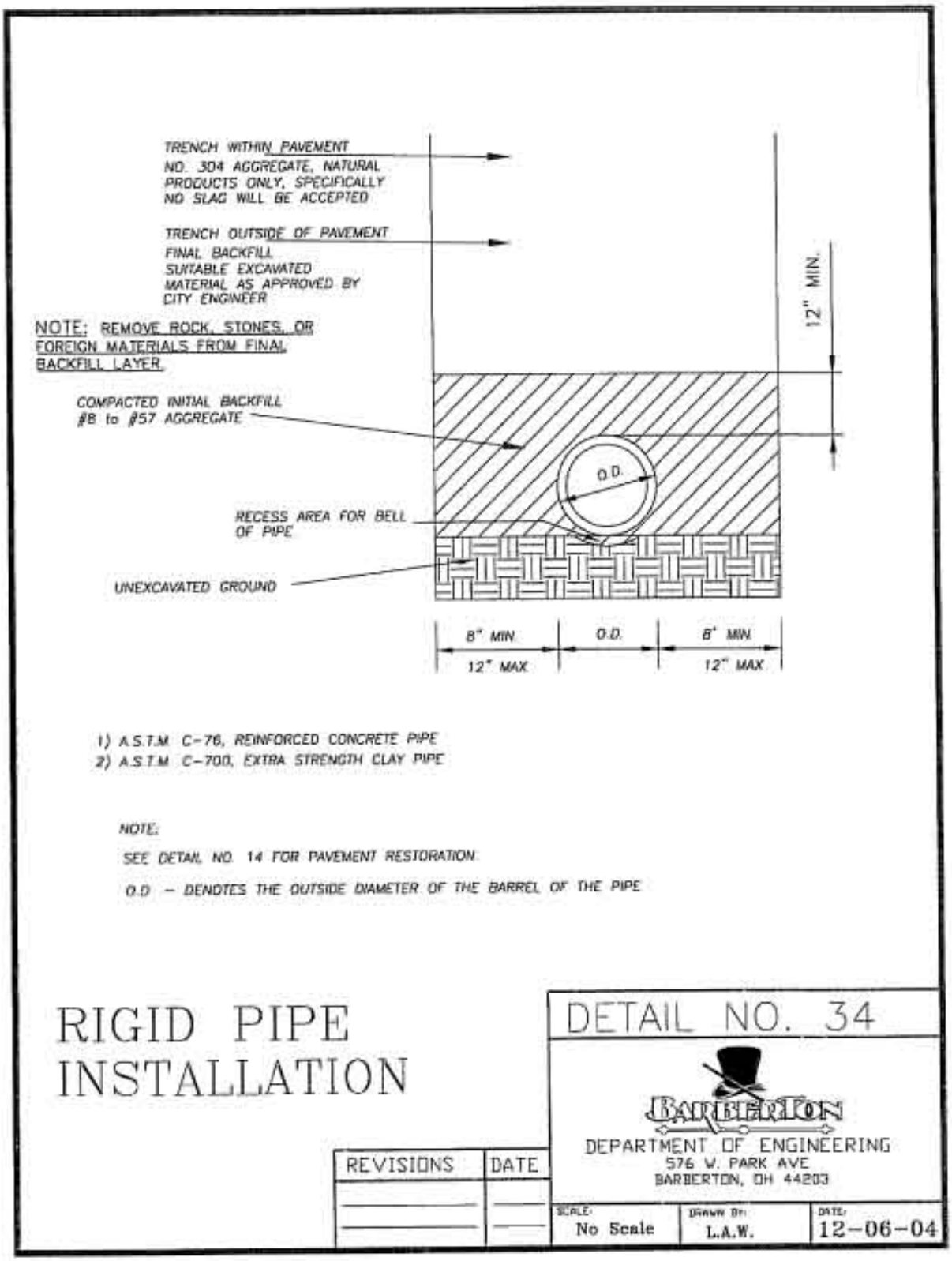

Detail No. 35 - Typical Dry Detention Basin

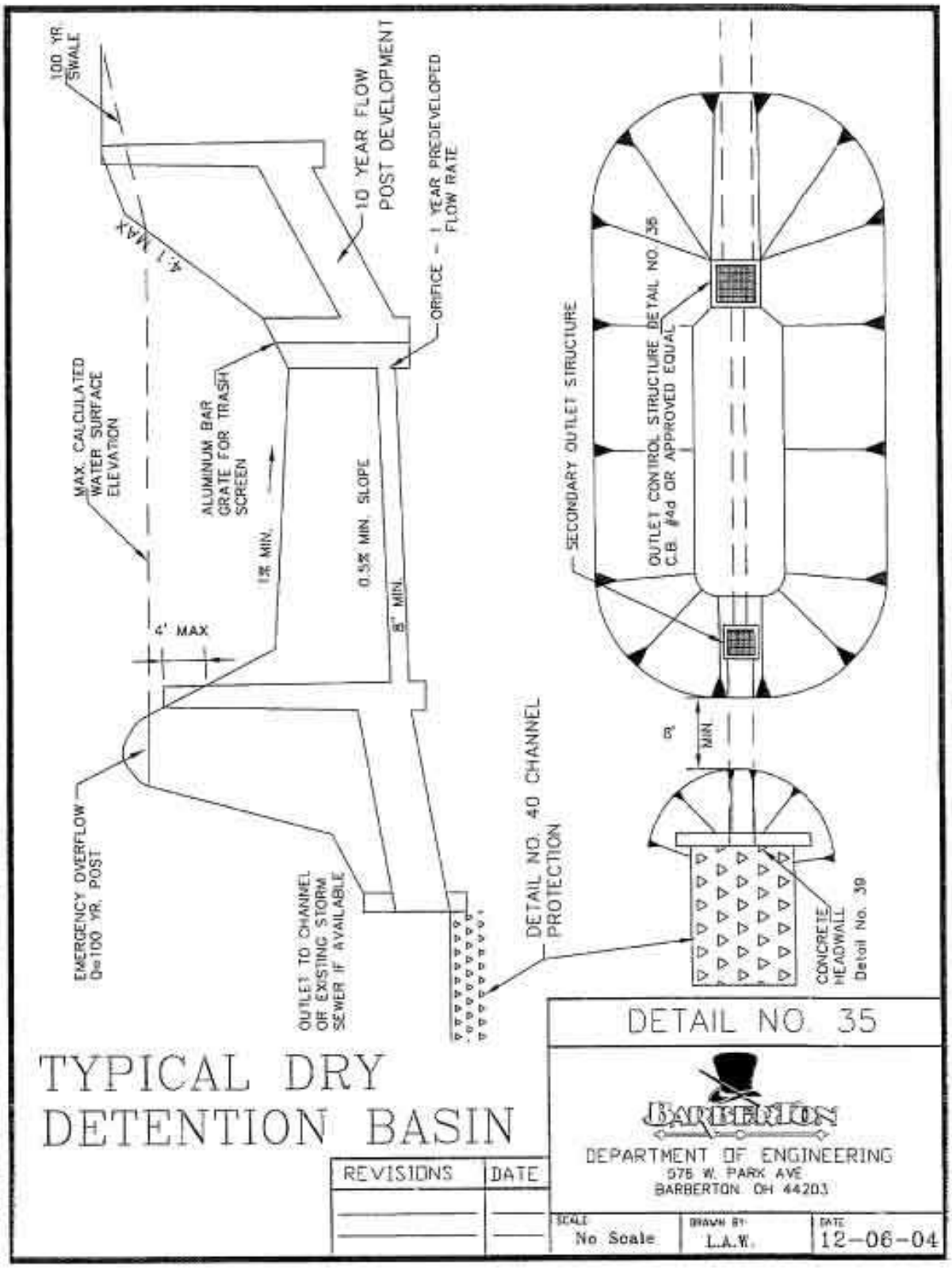

Detail No. 36 – Catch Basin 4d

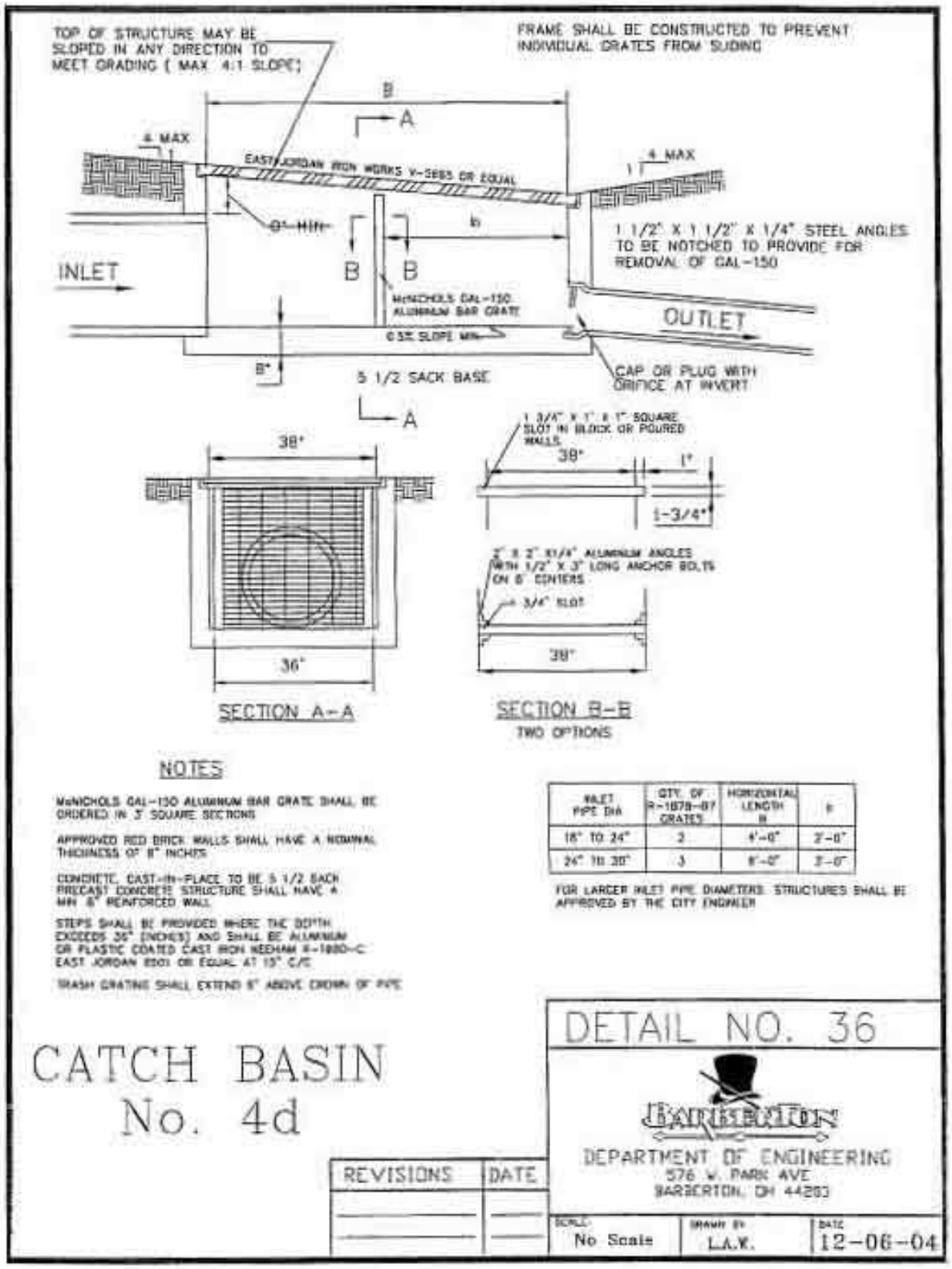

Detail No. 37 – Catch Basin No. 5d

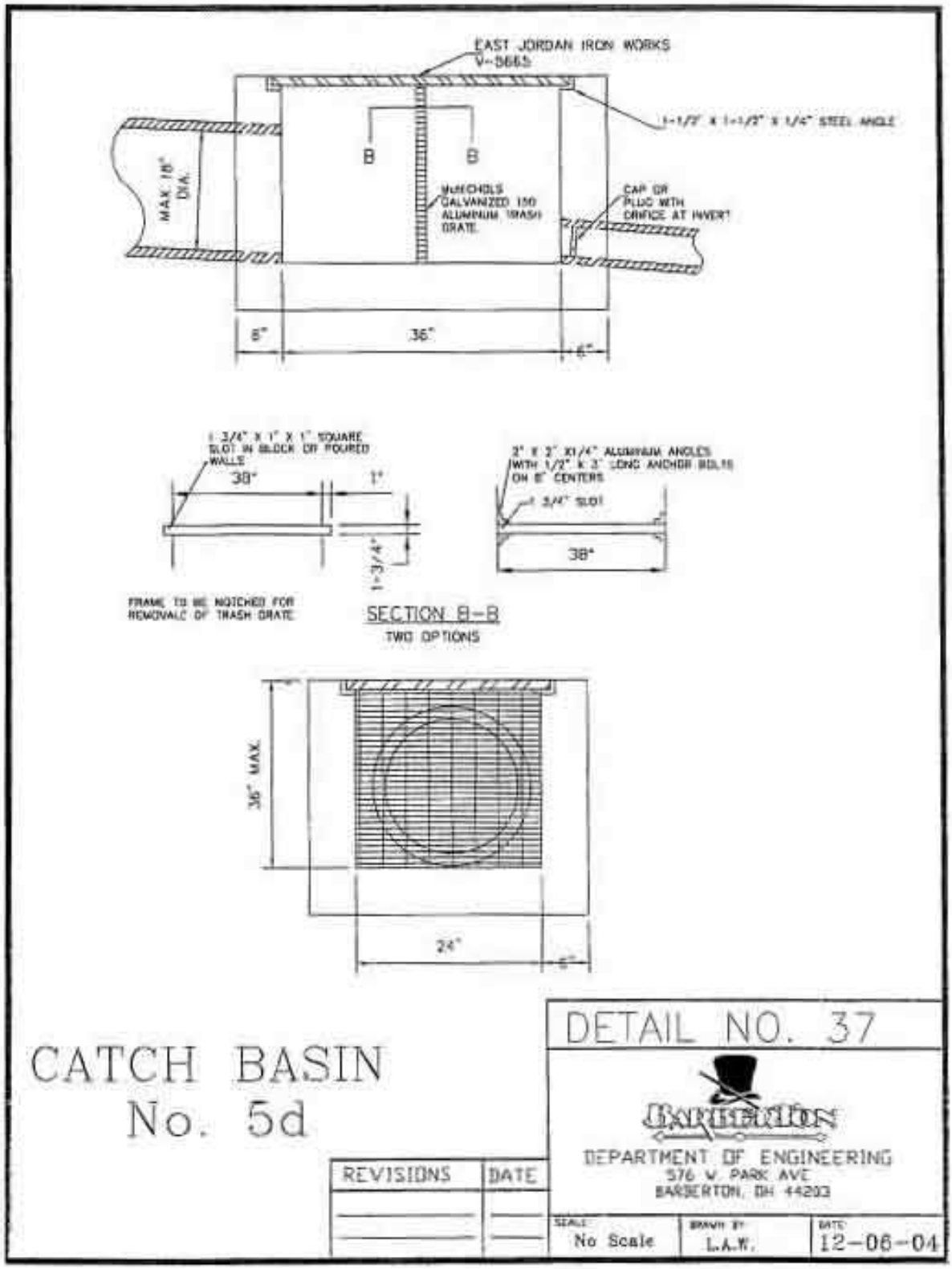

Detail No. 38 – Standard Headwall

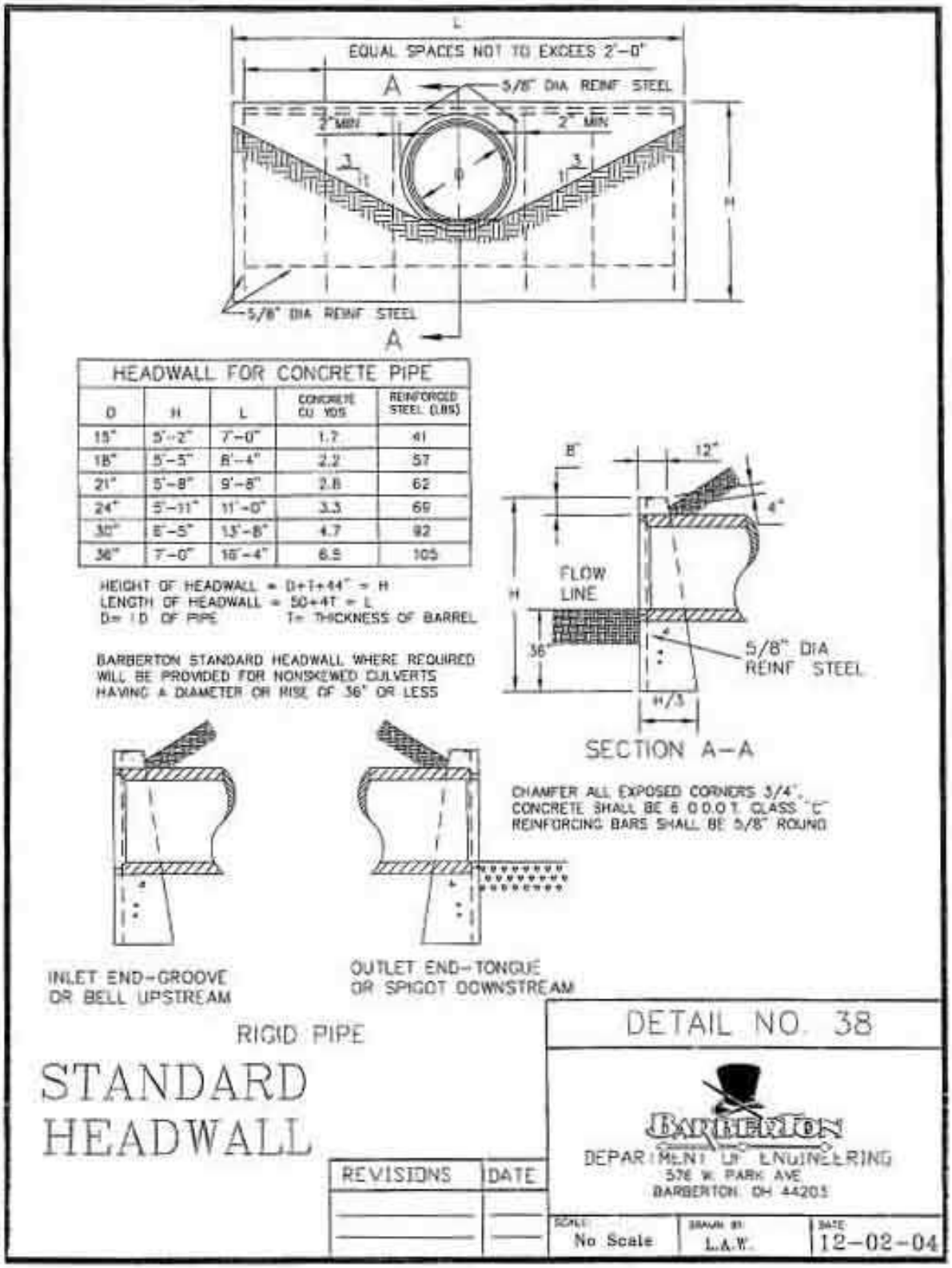

HEADWALL FOR CONCRETE PIPE				
D	H	L	CONCRETE CU YDS	REINFORCED STEEL (LBS)
15"	5'-2"	7'-0"	1.7	41
18"	5'-5"	8'-4"	2.2	57
21"	5'-8"	9'-8"	2.8	62
24"	5'-11"	11'-0"	3.3	69
30"	6'-5"	13'-8"	4.7	92
36"	7'-0"	16'-4"	6.5	105

HEIGHT OF HEADWALL = D+T+44" = H
LENGTH OF HEADWALL = 50+4T = L
D= I.D. OF PIPE T= THICKNESS OF BARREL

BARBERTON STANDARD HEADWALL WHERE REQUIRED WILL BE PROVIDED FOR NONSKEWED CULVERTS HAVING A DIAMETER OR RISE OF 36" OR LESS

Detail No. 39 – Standard Endwall

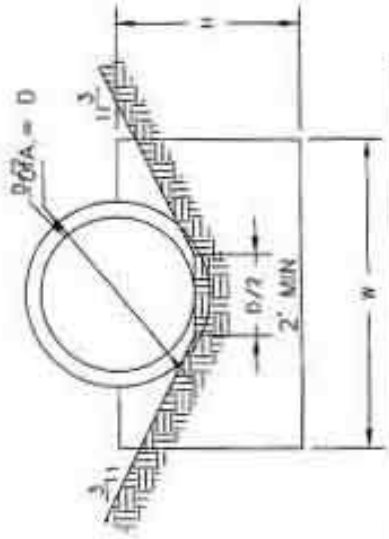

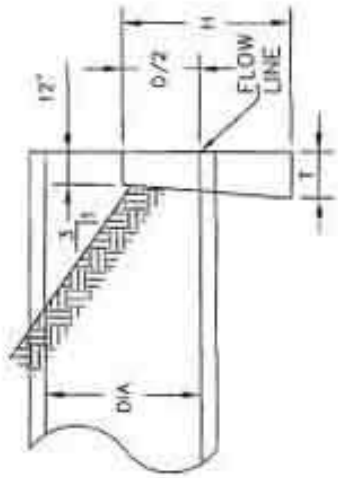

ENDWALL FOR CONCRETE PIPE

D	W	H	T	CONC. C.Y.	D	W	H	T	CONC. C.Y.
12"	2'-0"	3'-0"	12"	.20	54"	9'-3"	4'-9"	14"	1.32
15"	2'-6"	3'-2"	12"	.25	60"	10'-6"	5'-6"	16"	1.93
18"	3'-0"	3'-3"	12"	.31	66"	11'-9"	5'-9"	16"	2.42
21"	3'-6"	3'-4"	12"	.37	72"	13'-0"	6'-0"	18"	2.77
24"	4'-0"	3'-6"	12"	.43	78"	14'-3"	6'-3"	20"	3.37
27"	4'-5"	3'-8"	12"	.49	84"	15'-6"	6'-6"	22"	4.05
30"	5'-0"	3'-9"	12"	.56	90"	16'-9"	6'-9"	22"	4.51
33"	5'-6"	3'-10"	12"	.62	96"	18'-0"	7'-0"	24"	5.31
36"	6'-0"	4'-0"	12"	.69	102"	19'-3"	7'-3"	26"	6.20
39"	6'-6"	4'-2"	12"	.77	108"	20'-6"	7'-6"	26"	6.78
42"	7'-0"	4'-3"	12"	.84	114"	21'-9"	7'-9"	28"	7.81
48"	8'-0"	4'-6"	14"	1.09	120"	23'-0"	8'-0"	30"	8.93

CONCRETE FOR END WALLS SHALL BE CLASS "C"

STANDARD ENDWALL

REVISIONS	DATE

DETAIL NO 39

BARBERTON
DEPARTMENT OF ENGINEERING
576 W. PARK AVE
BARBERTON, OH 44203

SCALE	DRAWN BY	DATE
No Scale	L.A.W.	12-02-04

Detail No. 40 – Channel Protection

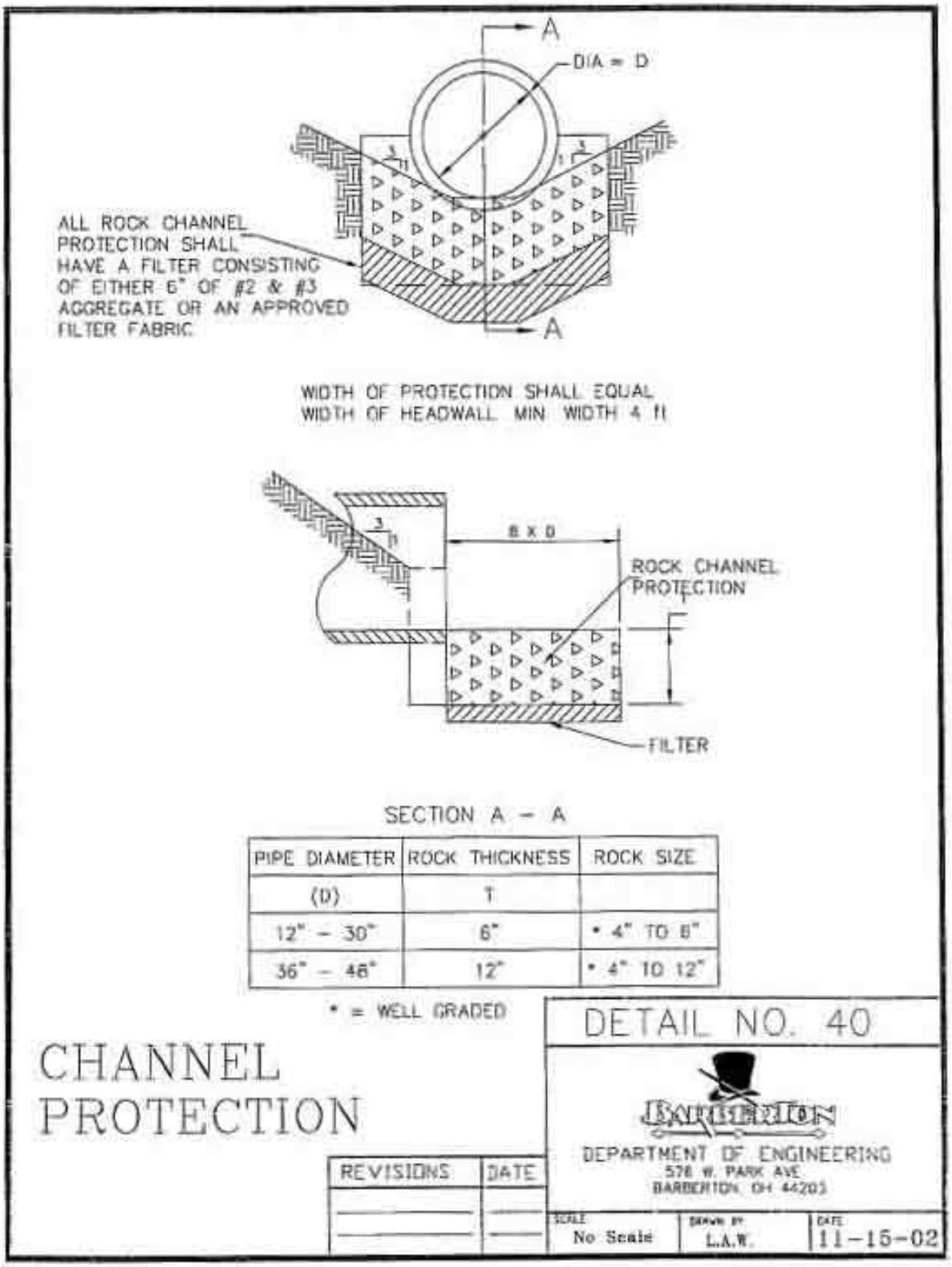

PIPE DIAMETER	ROCK THICKNESS	ROCK SIZE
(D)	T	
12" – 30"	6"	* 4" TO 8"
36" – 48"	12"	* 4" TO 12"

Detail No. 41 – East Jordon Iron Works Manhole Cover

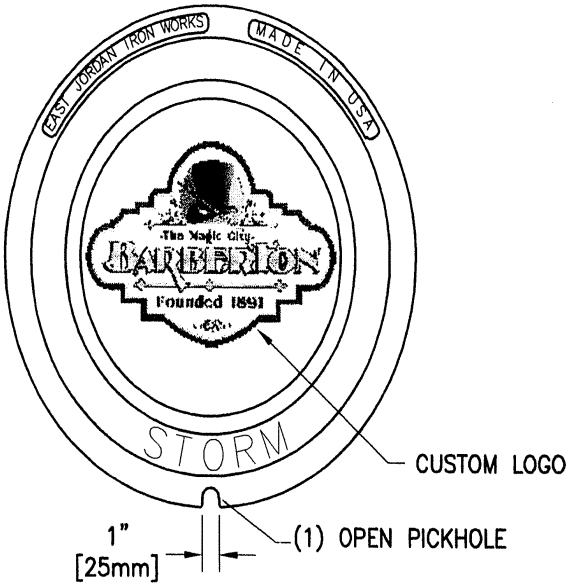

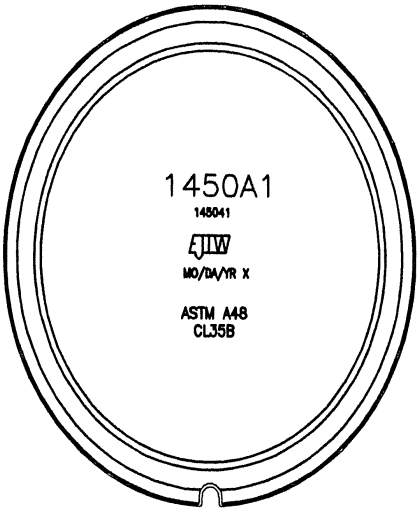

BOTTOM VIEW OF COVER

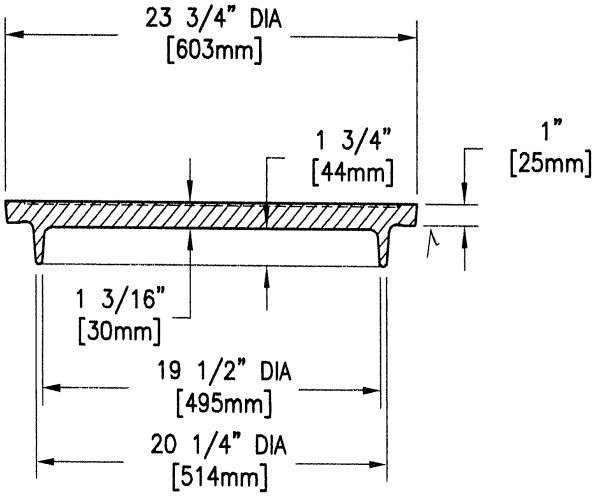

COVER SECTION

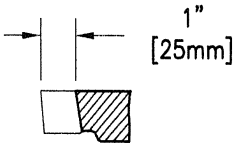

PICKHOLE DETAIL

CONFIDENTIAL: This drawing is the property of East Jordan Iron Works, Inc. and embodies confidential information, trade secret information, and/or know how that is the property of East Jordan Iron Works, Inc. © Copyright 2007 East Jordan Iron Works, Inc.

EJIW EAST JORDAN IRON WORKS EST.1883
800-626-4653
www.ejiw.com
MADE IN USA

PRODUCT NUMBER	**NCR07-1220B**
CATALOG NUMBER	**1450A1**
	COVER
LOAD RATING	**HEAVY DUTY**
COATING	**DIPPED**
ESTIMATED WEIGHT	COVER: 132 LBS 60kg
MATERIAL SPECIFICATION	COVER – GRAY IRON ASTM A48 CL35B
OPEN AREA	N/A
√ DESIGNATES MACHINE SURFACE	
DRAWN SMH	DATE 05/30/07
LAST REVISED	DATE
REFERENCE INFORMATION	00145041

***XXXX*.19 RIPARIAN SETBACKS**

Whereas, flooding is a threat to public health and safety and public and private property within the Tuscarawas River Watershed in the County of Summit, Ohio. Vegetated riparian areas lessen the damage from such flooding by slowing runoff, enabling water to soak into the ground, and by absorbing excess flow during flood events; and,

Whereas, stream bank erosion within the Tuscarawas River Watershed is a significant threat to public health and safety and public and private property, and vegetated riparian areas physically slow the rate of runoff and stabilize stream banks by anchoring the soil, thus reducing the erosive force of runoff and strengthening banks against high-velocity stream waters; and,

Whereas, the presence of natural vegetation on stream banks provides protection against erosive forces both within streams and on adjacent lands, whether publicly or privately owned; and,

Whereas, the protection of riparian areas results in the presence of plants best suited to each individual environment along a stream, with proven capability for survival and regeneration at no cost; and,

Whereas, the establishment of protected riparian areas provides a right-of-way for natural movement and relocation of stream channels, which can encroach upon adjacent land; and,

Whereas, vegetated riparian areas aid in filtering and trapping sediments, nutrients, chemicals, salts, septic discharge and other pollutants from runoff and floodwaters, thus helping to protect surface and ground water quality; and,

Whereas, vegetated riparian areas can provide a dense tree canopy that helps to maintain and improve the stability of stream water temperatures, thus protecting aquatic ecosystems and promoting a healthy environment that is diverse in the number of species of plants and animals and helps to reduce the presence of aquatic nuisance species; and,

Whereas, the management of riparian areas can result in a diverse and interconnected riparian corridor that provides habitat to a wide array of wildlife; and,

Whereas, there is a watershed-wide effort to reduce the flooding and erosion within the Tuscarawas River Watershed and to protect and enhance the water resources of the Tuscarawas River and all tributaries, and the County of Summit recognizes its obligation as a part of the watershed to reduce flooding and erosion by controlling runoff within its borders; and,

Whereas, the water quality and quantity flowing through areas downstream is heavily dependent upon the protective measures and good stewardship adopted by upstream communities, regardless of the size of the upstream channel; and,

Whereas, the Summit Soil and Water Conservation District (Summit SWCD), the Natural Resources Conservation Service of the United States Department of Agriculture (NRCS, USDA), the Ohio Environmental Protection Agency (OEPA), and the United States Environmental Protection Agency (USEPA) recommend riparian setbacks as a valuable tool in an overall natural resource management program for flood risk reduction, erosion control, water quality management, and aquatic life habitat protection; and,

Whereas, studies undertaken by, and reviewed by the Ohio Environmental Protection Agency and other accredited independent scientific entities recommend the minimum widths for riparian setbacks; and,

Whereas, the Council of the City of Barberton has reviewed and adopted the recommendations of the above government agencies, and the Council finds that in order to minimize encroachment on stream channels and the need for costly engineering solutions to protect structures and reduce property damage and threats to the safety of watershed resident; to protect and enhance the scenic beauty of the Tuscarawas Rivers, the quality of life of the residents of the County of Summit, and corresponding property values, it is necessary and appropriate to regulate the construction of structures and uses within a Riparian Setback along the banks of designated streams in the Tuscarawas River watershed; and,

Whereas, Article X, Section 3 of the Ohio Constitution grants the City of Barberton as a charter city, the legal authority to adopt land use and control measures for promoting the peace, health, safety, and general welfare of its citizens.

Whereas, 40 C.F.R. Parts 9, 122, 123, and 124 referred to as NPDES (National Pollutant Discharge Elimination System) Storm Water Phase II, require designated communities, including the City of Barberton to develop a Storm Water Management Program to address to quality of storm water runoff during and after soil disturbing activities; now

THEREFORE, BE IT ORDAINED by the Council of the City of Barberton, State of Ohio,

SECTION 1: That Chapter XXX of the Codified Ordinances of the City of Barberton establishing Riparian Setbacks within the City of Barberton read as follows:

Public Purpose

A. It is hereby determined that the system of streams within the City of Barberton contributes to the health, safety and general welfare of the residents of the City of Barberton. The purpose of this Riparian Setback Ordinance is to protect and preserve the water quality within streams of the City of Barberton and to protect residents of the City of Barberton from property loss and damage because of flooding and other impacts of the stream. The method of implementing this ordinance is by controlling uses and developments within a Riparian Setback that would impair the ability of the riparian area to:

1. Reduce flood impacts by absorbing peak flows, slowing the velocity of floodwaters and regulating base flow.

2. Stabilize the banks of streams to reduce bank erosion and the downstream transport of sediments eroded from stream banks.

3. Reduce pollutants in streams during periods of high flows by filtering, settling and transforming pollutants already present in streams.

4. Reduce pollutants in streams during periods of high flows by filtering, settling and transforming pollutants in runoff before they enter streams.

5. Provide areas for natural meandering and lateral movement of stream channels.

6. Reduce the presence of aquatic nuisance species to maintain diverse and connected riparian vegetation.

7. Provide high quality stream habitats with shade and food to a wide array of wildlife by maintaining diverse and connected riparian vegetation.

8. Benefit the County of Summit economically by minimizing encroachment on stream channels and reducing the need for costly engineering solutions such as dams and riprap.

9. Protect the health, safety, and welfare of the citizens of the County of Summit.

B. The following regulation has been enacted to protect these services of riparian areas by providing reasonable controls governing structures and uses in riparian setbacks.

Applicability, Compliance, and Violations

A. The provisions of this title shall apply to all lands within unincorporated areas that are within the jurisdiction of the City of Barberton.

B. No preliminary plan, building, or zoning approvals shall be issued by the City of Barberton without full compliance with the terms of these regulations where applicable.

C. The provisions of this title may be enforced through civil or criminal proceedings brought by the City of Barberton Law Director on behalf of the City of Barberton.

Conflicts with Other Regulations and Severability

A. Where this ordinance imposes a greater restriction upon land than is imposed or required by any other provision of law, regulation, contract or deed, the provisions of this ordinance shall control.

B. These regulations shall not limit or restrict the application of other provisions of law, regulation, contract, or deed, or the legal remedies available there under, except as provided in point “A” of this section.

C. If any clause, section, or provision of these regulations is declared invalid or unconstitutional by a court of competent jurisdiction, validity of the remainder shall not be affected thereby.

Definitions

1. BEST MANAGEMENT PRACTICES (BMPs): Conservation practices or protection measures which reduce impacts from a particular land use. Best Management Practices for construction are outlined in "Rainwater and Land Development, Ohio's Standard for Stormwater Management, Land Development, and Urban Stream Protection" prepared by the Ohio Department of Natural Resources.

2. DAMAGED OR DISEASED TREES: Trees that have split trunk, broken tops, heart rot, insect or fungus problems that will lead to imminent death, undercut root systems that put the tree in imminent danger of falling, lean as a result of root failure that puts the tree in imminent danger of falling, or any other condition that puts the tree in imminent danger of being uprooted or falling into or along a stream or onto a structure.

3. DEFINED CHANNEL: A natural or man-made depression in the terrain which is maintained and altered by the water and sediment it carries.

4. FEDERAL EMERGENCY MANAGEMENT AGENCY (FEMA): The agency with overall responsibility for administering the National Flood Insurance Program.

5. FINAL PLAT: A final tracing of all or a phase of subdivision and its complete survey information.

6. IMPERVIOUS COVER: Any surface that cannot effectively absorb or infiltrate water. This may include roads, streets, parking lots, rooftops, sidewalks and other areas not covered by vegetation.

7. NATURAL SUCCESSION: A gradual and continuous replacement of one of kind plant and animal group by a more complex group. The plants and animals present in the initial group modify the environment through their life activities thereby making it unfavorable for themselves. They are gradually replaced by a different group of plants and animals better adapted to the new environment.

8. NOXIOUS WEED: Any plant defined as a "noxious weed and rank vegetation" in Section 21.1 in the Codified Ordinances of the County of Summit, Ohio.

9. OHIO RAPID ASSESSMENT METHOD: A multi-parameter qualitative index established by the Ohio Environmental Protection Agency to evaluate wetland quality and function.

10. 100-YEAR FLOODPLAIN: Any land susceptible to being inundated by water from a base flood, which is the flood that has a one percent or greater chance of being equaled or exceeded in any given year. For the purposes of these regulations, the 100-year floodplain shall be defined by FEMA and approved by the City of Barberton Department of Building Standards.

11. ORDINARY HIGH WATER MARK: The point of the bank or shore to which the presence and action of surface water is so continuous as to leave a district marked by erosion, destruction or prevention of woody terrestrial vegetation, predominance of aquatic vegetation or other easily recognized characteristic. The ordinary high water mark defines the channel of a stream.

12. POLLUTION: Any contamination or alternation of the physical, chemical, or biological properties of any waters that will render the waters harmful or detrimental to: public health, safety or welfare; domestic, commercial, industrial, agricultural, recreational, or other legitimate beneficial uses; livestock, wildlife, including birds, fish or other aquatic life.

    - "POINT SOURCE" pollution is traceable to a discrete point or pipe.

    - "NON-POINT SOURCE" pollution is generated by various land use activities rather than from an identifiable or discrete source, and is conveyed to waterways through natural processes, such as rainfall, storm runoff, or ground water seepage rather than direct discharge.

13. PRELIMINARY PLAN: A drawing of a major subdivision for the purpose of study and which, if approved, permits proceeding with the preparation of the final plat.

14. RIPARIAN AREA: A transitional area between flowing water and terrestrial ecosystems, which provides a continuous exchange of nutrients and woody debris between land and water. This area is at least periodically influenced by flooding. Riparian areas, if appropriately sized and managed, help to stabilize banks, limit erosion, reduce flood size flows and/or filter and settle out runoff pollutants, or perform other functions consistent with the purposes of these regulations.

15. RIPARIAN SETBACK: The area set back from each bank of a stream to protect the riparian area and stream from impacts of development, and streamside residents from impacts of flooding and land loss through erosion. Riparian Setbacks are those lands within the County of Summit that fall within the area defined by the criteria set forth in these regulations.

16. SOIL AND WATER CONSERVATION DISTRICT (SWCD): An entity organized under Chapter 1515 of the Ohio Revised Code referring to either the Soil and Water Conservation District Board or its designated employees, hereinafter referred to as the Summit SWCD.

17. SOIL DISTURBING ACTIVITY: Clearing, grading, excavating, filling or other alteration of the earth's surface where natural or human made ground cover is destroyed and which may result in, or contribute to, erosion and sediment pollution.

18. STREAM: A surface watercourse with a well-defined bed and bank, either natural or artificial, which confines and conducts continuous or periodical flowing water (ORC 6105.01) in such a way that terrestrial vegetation cannot establish roots within the channel.

19. STORMWATER POLLUTION PREVENTION PLAN (SWPPP): The plan which describes all the elements of the stormwater strategy implemented during and after construction. The plan addresses erosion control and stormwater quality.

20. STORMWATER QUALITY TREATMENT: The removal of pollutants from urban runoff and improvement of water quality, accomplished largely by deposition and utilizing the benefits of natural processes.

21. VARIANCE: A modification of the enforcement of the Riparian Setback Ordinance which will not be contrary to the public interest and where, due to conditions peculiar to this property and not the result of the action of the applicant, a literal enforcement of the ordinance would result in undue hardship to the applicant.

22. WATERCOURSE: A natural or artificial waterway, such as a stream or river, with a defined bed and channel and definite direction of course that is contained within, flows through, or borders the community.

23. WATERSHED: An area of land that drains into a particular watercourse, usually divided by topography.

24. WETLANDS: Those areas that are inundated or saturated by surface or ground water at a frequency and duration sufficient to support, and that under normal circumstances do support, a prevalence of vegetation typically adapted for life in saturated soil conditions, including swamps, marshes, bogs, and similar areas.

Establishment of a Riparian Setback

A. Riparian Setbacks are established as provided in this title.

B. Streams addressed by this ordinance are those which meet the definition of "stream" of these regulations and are indicated on at least one of the following maps:

1. USGS topographical map
2. Summit County Riparian Setback map
3. Soil maps located in the Soil Survey for Summit County, Ohio, USDA, NRCS

C. Widths of setbacks are measured as horizontal map distance outward from the ordinary high water mark on each side of a stream and are established as follows:

1. A minimum of 300 feet on each side of all streams draining an area greater than 300 square miles.

2. A minimum of 100 feet on each side of all streams draining an area greater than 20 square miles and up to 300 square miles.

3. A minimum of 75 feet on each side of all streams draining an area greater than 0.5 square mile (320 acres) and up to 20 square miles.

4. A minimum of 50 feet on each side of all streams draining an area greater than 0.05 square mile (32 acres) and up to 0.5 square mile (320 acres).

5. A minimum of 30 feet on each side of all streams draining an area less than 0.05 square mile (32 acres).

D. The following are exempt from the terms and protection of this ordinance: grassy swales, roadside ditches, drainage ditches created at the time of a subdivision to convey stormwater to another system, tile drainage systems, and stream culverts.

E. The following shall apply to the Riparian Setback:

1. Where the 100-year floodplain is wider than the Riparian Setback on either or both sides of the stream, the Riparian Setback shall be extended to the outer edge of the 100-year floodplain. The 100-year floodplain shall be defined by FEMA and approved by the County of Summit Department of Building Standards.

2. Because the gradient of the riparian corridor significantly influences impacts on the stream, the following adjustment for steep slopes will be integrated into the Riparian Setback formulae for width determination:

Average Percent Slope	Width of Setback
15% - 20%	Add 25 feet
21% - 25%	Add 50 feet
>25%	Add 100 feet

Average streambank slope is to be calculated using methodology outlined in the "Ohio Supplement to Urban Hydrology for Small Watersheds, Technical Release Number 55 (TR-55)" by USDA, NRCS.

3. Where wetlands protected under federal or state law are identified within the Riparian Setback, the Riparian Setback shall consist of the full extent of the wetlands plus the following additional setback widths:

    a. A 50 foot setback extending beyond the outer boundary of a Category 3 wetlands
    b. A 30 foot setback extending beyond the outer boundary of a Category 2 wetlands
    c. No additional setback will be required adjacent to Category 1 wetlands

4. Wetlands shall be delineated by a qualified professional under guidelines established by the US Army Corps of Engineers and Ohio Environmental Protection Agency and the delineation approved by the appropriate agencies. All wetland delineations shall also include the latest version of the Ohio Rapid Assessment Method for wetland evaluation approved at the time of application of the regulations.

5. The applicant shall be responsible for delineating the Riparian Setback, including any expansions or modifications as required by B through D of this section, and identifying this setback on all subdivisions, land development plans, and/or building permit applications. This delineation shall be done at the time of application of the preliminary plans, or all plans that are required, or at the time of submission of any permit applications. This delineation shall be subject to review and approval by the Summit SWCD. As the result of this review, the Summit SWCD may require further studies from the applicant.

6. Prior to any soil disturbing activity, the Riparian Setback shall be clearly delineated with construction fencing or other suitable material by the applicant on site, and such delineation shall be maintained throughout soil-disturbing activities. The delineated area shall be maintained in an undisturbed state unless otherwise permitted by these regulations. All fencing shall be removed when a development project is completed.

7. No approvals or permits shall be issued by the City of Barberton prior to delineation of the Riparian Setback in conformance with these regulations.

8. Upon completion of an approved subdivision, the Riparian Setback shall be permanently recorded on the plat records for the County of Summit.

Uses Permitted in the Riparian Setback

A. The following uses are permitted by right within the Riparian Setbacks without prior approval.

Open space uses that are passive in character shall be permitted in the Riparian Setback including, but not limited to, those listed in 1 through 4 of this section. No use permitted under these regulations shall be constructed as allowing trespass on privately held lands.

Alteration of this natural area is strictly limited. Except as otherwise provided in these regulations, the Riparian Setback shall be preserved in its natural state.

1. Recreational Activity. Passive recreational uses, as permitted by federal, state and local laws, such as hiking, non-motorized bicycling, fishing, hunting, picnicking and similar uses and associated structures including boardwalks, pathways constructed of pervious material, picnic tables, and wildlife viewing areas.

2. Removal of Damaged or Diseased Trees. Damaged or diseased trees may be removed. Because of the potential for felled logs and braches to damage downstream properties and/or block ditches or otherwise exacerbate flooding, logs and branches resulting from the removal of damaged or diseased trees that are greater than 6 inches in diameter, shall be anchored to the shore or removed from the 100-year floodplain.

3. Revegetation and/or Reforestation. The revegetation and/or reforestation of the Riparian Setback shall be allowed without approval of the Summit SWCD. Species of shrubs and vines recommended for stabilizing flood prone areas along streams within the County of Summit are listed in the Appendix.

4. The County of Summit Engineer maintains the right of access to all streams within the County of Summit for the purposes outlined in the Ohio Revised Code, Sections 6131.01 to 6131.64, 6133.01 to 6133.15, 6135.01 to 6135.27, and 6137.05.1.

B. The following uses are permitted by right within the Riparian Setbacks with prior approval of the design.

1. Stream bank Stabilization/Erosion Control Measures. Best Management Practices (BMP's) for stream bank stabilization or erosion control may be allowed if such practices are within permitted uses by the local, state, and federal government regulations and are ecologically compatible and emphasize the use of natural materials and native plant species where practical and available. Such stream bank stabilization/erosion control practices shall only be undertaken upon approval of a Stormwater Pollution prevention Plan (SWPPP or SW3P) by the Summit SWCD.

2. Crossings. In reviewing plans for stream crossings, the City of Barberton may confer with the Summit SWCD, the Ohio Department of Natural Resources, Division of Natural Areas; the Ohio Environmental Protection Agency, Division of Surface Water; the County of Summit Engineer; the Department of Environmental Services of Summit County; the Summit County Health Department; or other technical experts as necessary.

    a. Limited crossings of designated streams through the Riparian Setback by vehicles, storm sewers, sewer and/or water lines, and public utility lines will be per the approval of local, county, and state governing agencies and as a part of the regular subdivision review process.

    b. One driveway crossing per stream per tax parcel will be allowed for individual landowners.

    c. Roadway crossings for major and minor subdivisions, open space subdivisions, or any other non-single family residential use shall be designed and constructed per the County of Summit Engineer's design standards and as approved by the City of Barberton's Planning Commission. If more than two crossings per 1,000 linear feet of stream center are required for these areas, the applicant must apply for a variance.

    d. All roadway crossings shall be perpendicular to the stream flow and shall minimize disturbance to the Riparian Setback and shall mitigate any necessary disturbances.

3. Placement of stormwater retention or detention facilities may be considered within the Riparian Setback if:

    a. Stormwater quality treatment that is consistent with current state standards is incorporated into the basin.

    b. The stormwater quality treatment basin is located at least 50 feet from the ordinary high water mark of the stream.

Uses Prohibited in the Riparian Setback

The following uses are specifically prohibited within the Riparian Setback:

A. Construction. There shall be no structures of any kind, except as permitted under these regulations.

B. Dredging or Dumping. There shall be no drilling for mineral products, mining activity, filling or dredging of soil, spoils, or any material – natural or man-made – except as permitted under these regulations.

C. Roads or Driveways. There shall be no roads or driveways, except as permitted under these regulations.

D. Motorized Vehicles. There shall be no use of motorized vehicles of any kind, except as permitted under these regulations.

E. Modification of Natural Vegetation. Modification of the natural vegetation shall be limited to conservation maintenance that the landowner deems necessary to control noxious weeds; for such plantings as are consistent with these regulations; for such disturbances as are approved under these regulations; and for the passive enjoyment, access and maintenance of landscaping or lawns existing at the time of passage of these regulations.

Nothing in this section shall be construed as requiring a landowner to plant or undertake any other activities in the Riparian Setback provided the landowner allows for natural succession.

F. Parking Lots. There shall be no parking lots or other human made impervious cover, except as permitted under these regulations.

G. New surface and/or subsurface sewage disposal or treatment area. Riparian Setbacks shall not be used for the disposal or treatment of sewage except for:

1. Undeveloped parcels that have received site evaluation approval and/or permit approval prior to the enactment of this ordinance.

2. Dwellings served by disposal/treatment systems existing at the time of passage of these regulations when such systems are properly sited (approved site evaluation) and permitted or in accordance with the Barberton Health Department and/or the Ohio Environmental Protection Agency. Existing failing systems which are located within the Riparian Setback can be upgraded with approval of the Barberton Health Department and/or the Ohio Environmental Protection Agency.

Non-Conforming Structures Or Uses In The Riparian Setback

A. Structures and uses within the Riparian Setback, existing at the time of passage of these regulations, that are not permitted under these regulations may be continued but shall not be expanded except as set forth in this title.

B. If damaged or destroyed, these structures or uses may be repaired or restored within two years from the date of damage/destruction or the adoption of these regulations, whichever is later, at the property owners own risk.

C. A residential structure or use within the Riparian Setback existing at the time of passage of these regulations may be expanded subject to the provisions of 1. through 3. below:

1. The expansion conforms to exiting zoning regulations.

2. The expansion must not impact the stream channel or the 100-year flood plain.

3. The expansion must not exceed an area of 15% of the footprint of existing structure or use that lies within the Riparian Setback. Expansions exceeding 15% of the footprint within the Riparian Setback must be obtained through the variance process.

Boundary Interpretation And Appeals Procedure

A. When an applicant disputes the boundary of the Riparian Setback or the ordinary high water mark of a stream, the applicant shall submit evidence to the Summit SWCD that describes the boundary, presents the applicant's proposed boundary and presents all justification for the proposed boundary change.

B. The Summit SWCD shall evaluate all materials submitted and shall make a written recommendation to the City of Barberton Board of Zoning and Building Appeals or the City of Barberton Planning Commission within a reasonable period of time not to exceed sixty days. A copy of this recommendation shall be submitted to the applicant. If during this evaluation the Summit SWCD requires further information to complete this evaluation, the applicant may be required to provide additional information.

C. The City of Barberton Board of Zoning and Building Appeals or the City of Barberton Planning Commission shall decide such boundary disputes. The party contesting the location of the Riparian Setback or the ordinary high water mark of the streams as determined by these regulations shall have the burden of proof in case of any such appeal.

Variances Within Riparian Setback

A. The City of Barberton Board of Zoning and Building Appeals or the City of Barberton Planning Commission, shall consult with representatives from the Summit SWCD; the Ohio Department of Natural Resources, Division of Natural Areas; the Ohio Environmental Protection Agency, Division of Surface Water; the County of Summit Engineer; the Department of Environmental Services of Summit County; the Summit County Health Department; or other technical experts as necessary to consider variance requests.

B. Expansions of residential structures or uses exceeding 15% of the footprint area and expansions of all non-residential structures or uses are subject to provision 1. through 4. below:

1. The expansion conforms to the existing zoning regulations.

2. The expansion must not impact the stream channel or the 100-year floodplain.

3. The expansion of a non-residential structure or use must not affect upstream or downstream hydrologic conditions which could cause damage from flooding or streambank erosion to landowners in those areas. A hydrologic study must be completed by non-residential applicants only as a process of the variance application.

4. The expansion of a non-residential structure of use will not exceed 25% of the footprint area. The 25% expansion limit is per the portion of the structure or use that lies within the Riparian Setback.

C. Requests for variances for subdivisions will be considered for the following:

1. An additional stream crossing or crossings for a subdivision or open space development which is necessary for the health, welfare, and safety of the residents of the subdivision.

2. A reduction of the setback width, not to exceed 10% of the prescribed Riparian Setback width.

D. No variances shall be granted for expansion of the following structures or uses:

1. Facilities which use, store, distribute, or sell petroleum-based products or any hazardous materials. Such facilities include, but are not limited to: asphalt plants, dry cleaners, gasoline service stations, and road maintenance facilities.

2. Facilities which use, store, distribute, or sell products which may contribute higher than acceptable concentrations of dissolved or particulate matter to stormwater runoff around the facility. Such facilities include, but are not limited to: landfills or transfer stations, junk yards, recycling facilities, quarries and borrow pits, sand and gravel extraction operations, and road salt storage barns.

E. In reviewing whether to grant variances, the City of Barberton Board of Zoning and Building Appeals or the City of Barberton Planning Commission shall consider the following:

1. The extent to which the requested variance impairs the functions of the riparian area. This determination shall be based on sufficient technical and scientific evidence as provided by the applicant and the agencies listed in A. through D. above.

2. The soil type and natural vegetation of the parcel as well as the percentage of the parcel that is in the 100-year floodplain.

3. The degree of hardship these regulations place on the applicant and the availability of alternatives to the proposed activity.

Inspection of Riparian Setback

A. The Riparian Setback shall be inspected by the Summit SWCD:

1. When a preliminary subdivision plat or other land development plan is submitted to the City of Barberton.

2. When a building or zoning permit is requested.

3. Prior to any soil disturbing activity to inspect the delineation of the Riparian Setback as required under these regulations.

B. The Riparian Setback shall also be inspected annually or as time permits by the Summit SWCD or approved monitoring entity for compliance with any approvals under these regulations or at any time evidence is brought to the attention of the Summit SWCD that uses or structures are occurring that may reasonably be expected to violate the provisions of these regulations.

C. Violations of these regulations will be handled as noted in Section Applicability, Compliance and Violations.

SECTION 2

Provided this ordinance receives the majority affirmative vote, it shall take effect and be in force at the earliest time provided by law.

INTRODUCED _____